FACT 50 4s
Maintenance Manual

Contents

Preface

This maintenance manual is used for operating and maintaining Motorcycle FACT 50 4T.

Preparing Documents include all necessary instructions and statements. Please carefully read this manual before operation.

Inspection & Adjustment states how to check and adjust your motorcycle. All safety rules and maintenance regulations shall be carried out from the beginning of periodic inspection.

Except for Chapter I, the rest chapters explain the disassembly/ assembly/ inspection of engine, entire motorcycle and electrical parts.

Breakdown drawing, systematic drawing, failure analysis and statements are contained at the first part of each chapter.

Please note that photos, pictures or instructions are for your reference only. The actual object may differ from this mentioned here. We will not make notification for any discrepancy.

Preparing documents

General safety Maintenance rules

Specification table Failure diagnosis

General Safety

Carbon monoxide

Engine must be started up in a well-ventilated place, not in a closed area.

Note

Exhaust gas contains poisonous carbon monoxide, which may cause unconsciousness or even death of human.

Start up engine in an open place. The exhaust cleaning system shall be adopted if engine is started up in a closed area.

Petrol

Ventilation is required for working places. Fire is strictly forbidden in any working place or where petroleum is stored.

Battery

Battery emits explosive gas. Therefore, it shall be far away from fire sources, naked flame or smoking places. Make sure good ventilation during charging.

Battery contains sulfuric acid (electrolyte). It will burn your skin or eyes when contacted. Therefore, wear protective clothing and mask.

——Clean with fresh water immediately if electrolyte splashes on the skin.

——Clean with fresh water at least for 15 minutes immediately and then go to the doctor if electrolyte splashes on eyes.

Electrolyte is poisonous. Drink a large quantity of fresh water, milk, milk of magnesia (laxative antacid) or mineral oil if electrolyte is swollen accidentally. Then go to the doctor. It shall be unreachable for children.

Do not remove the battery during commissioning. Otherwise, it may cause damage to inner parts of the vehicle.

Maintenance Rules

Metric tools are preferable for the maintenance of this motorcycle. Improper tools may cause damage.

Clean up the surface of components or assembly parts before removing or opening the shield for maintenance,

which can prevent dirt from falling into the engine, chassis or braking system.

Wash and dry parts with air compressor after disassembly and before measurement of attrition value.

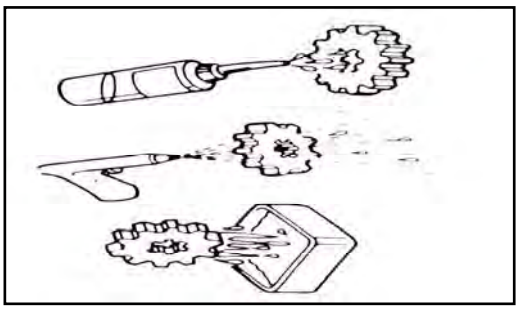

Solvent or oil can easily damage aging rubber articles. Check rubber before reassembly and replace rubber if necessary.

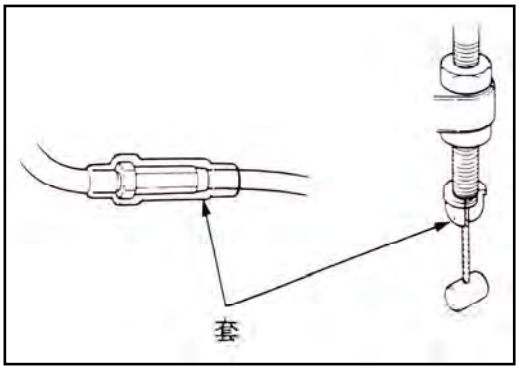

套：boot

When loosening assembly parts, please start from outside to inside. Small assembly parts shall be loosened first.

Complex assembly parts, such as gearbox, shall be stored in proper order for facilitating installation in the future.

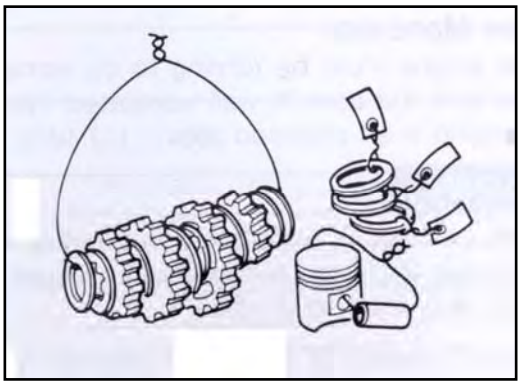

Please specially note important connections before disassembly. Replace parts which will not be in use before disassembly.

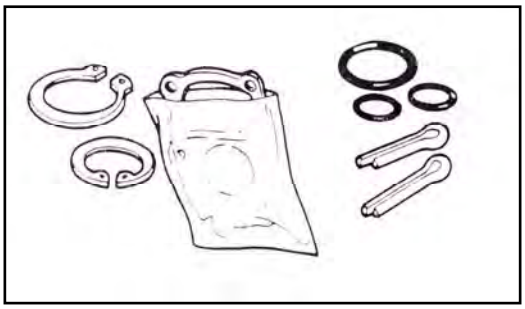

Bolts and screws with different length shall be separately used for different assembly parts and shields, and they shall be correctly mounted. Insert a bolt into a hole to check whether it is proper if you are confused.

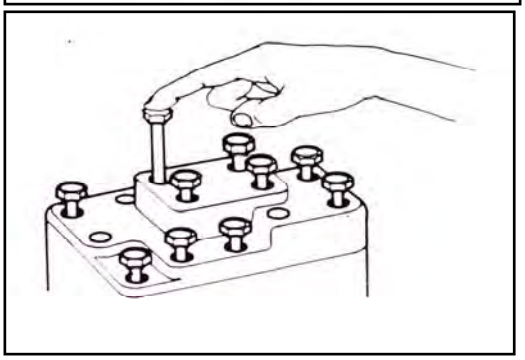

Fill the groove with grease before mounting an oil seal. Check whether the oil seal is smooth or damaged during assembly.

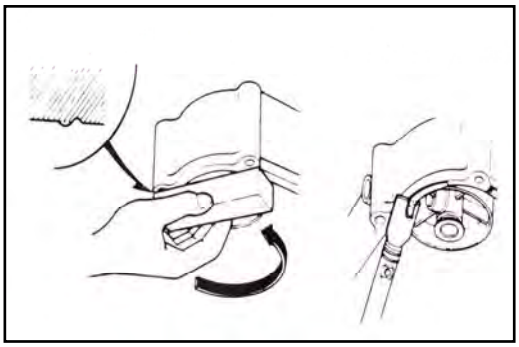

When installing a hose (fuel, vacuum or cooling agent), insert its end into the bottom of the connector so that the hose clip can properly fix the connector. Rubber or plastic dirt-proof boot shall be mounted at the original design position.

槽：groove 夹子：clip 接头：connector

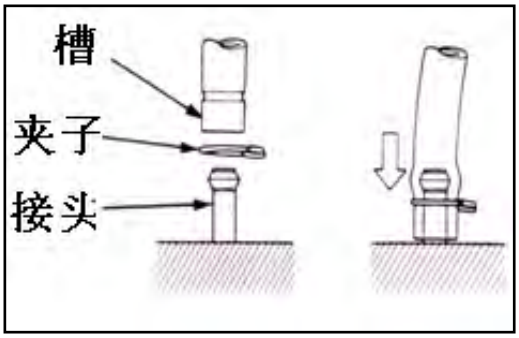

During dismantling ball bearings, one or two (inside & outside) bearing rollers shall be supported by tools. Ball bearings may be damaged during disassembly and have to be replaced if only one roller (either inside or outside) is imposed with force.

以上两例都会使轴承破裂：Bearings will be broken under either occasion as mentioned.

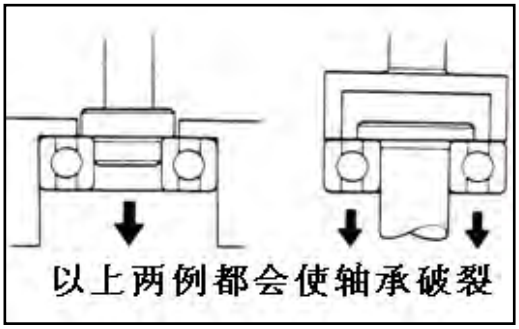

Loose cables threaten electrical safety. Check each cable after it is clamped to another for electrical safety;

Wire clamps are not allowed to bend towards welding point;

Bind cables at the designated place;

Do not deploy cables at the end of frame or at sharp point;

Do not deploy cables at the end of bolts or screws;

Cable deployment shall be far from heat source and where cables may be clamped during moving;

Cables along the handlebar shall be neither too tight nor too loose, and do not interface with any neighboring parts at steering positions;

Cables shall be properly deployed without twist or knot;

Check whether the connector jacket is damaged and whether the connector is over-stretched before mounting connectors;

Adopt adhesive tape or hosepipe to protect cables if they are positioned at sharp point or corner;

Bind cables with tape after repairing;

Control cables shall not be bent or twisted. Clumsy operation may be caused in light of damaged control cables.

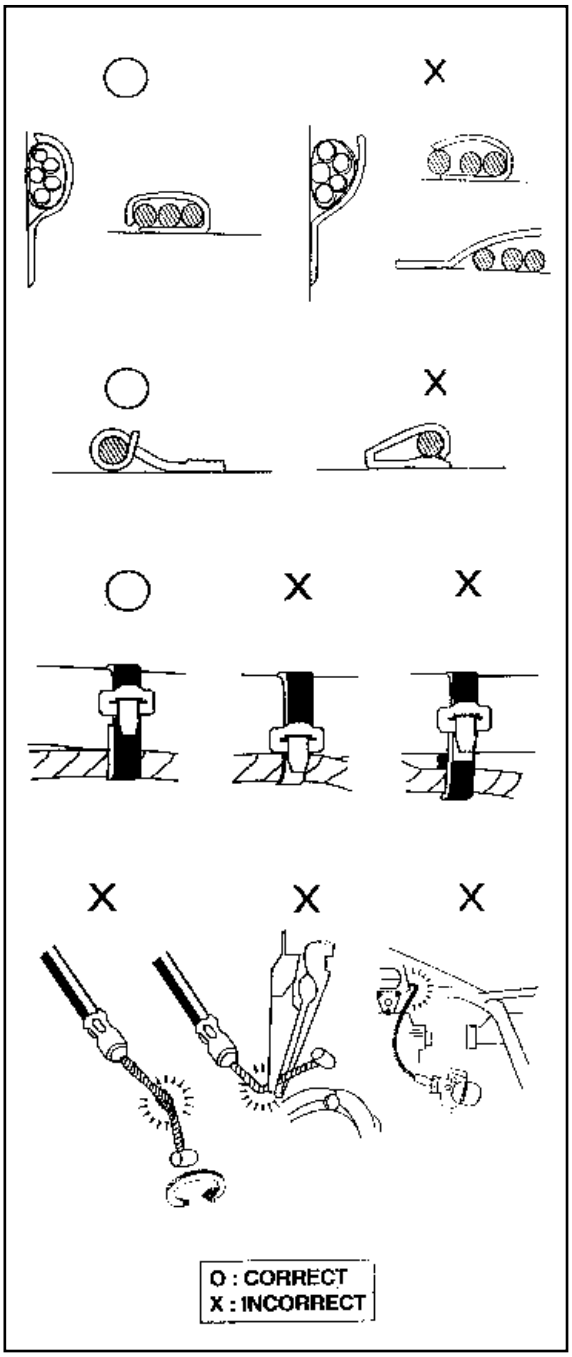

Identification

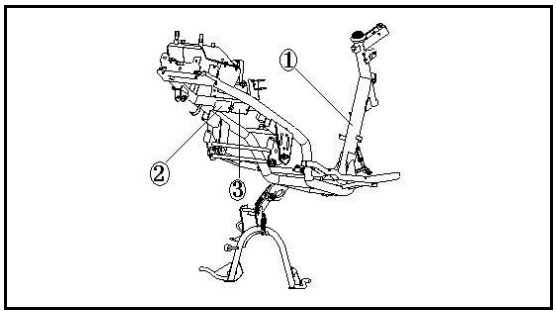

Fig. 1-1

1. The identification number of motorcycle frame is marked at : *LBBTEBAA?????????. The 10th digital and 11th digital respectively indicate year code and factory code. “*” shall be added before and after the frame number. The frame sign is nailed at . See Fig. 1-1.

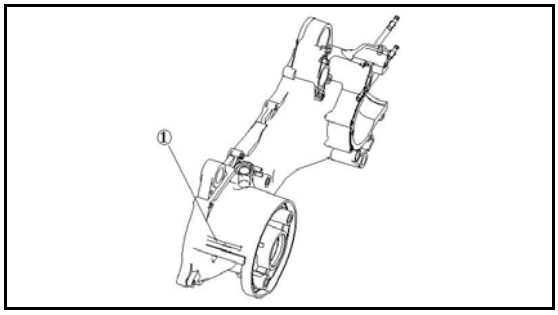

Fig. 1-2

2. The engine serial number is printed on the shell of crankcase. See fig. 1-2.

Significant Notes

1. Please apply valid Qianjiang parts and accessories. Any part or accessory not in accordance with the design specification of Qianjiang Company may cause damage to engine.
2. Only metric tools are valid for maintenance and repair. Metric screws, bolts and nuts can not be exchanged with imperial fasteners.
3. New gaskets, O-rings, cotter pins and locking pieces shall be applied for re-assembly.
4. Bolts with large diameter or positioned inside shall be fastened first and then diagonally screw down until reaching required torque, otherwise there is special instruction.
5. Wash disassembled parts with cleanser. Lubricate all sliding surface before assembly.
6. Check whether all the parts and accessories are correctly mounted and operated after assembly.
7. Clean and remove oil before measurement. Add recommended lubricant to the lubricating areas during assembly.
8. Apply lubricant to the surface of engine and driving system if they are dismantled for long-term storage, which can prevent rust and dirt.

Special Tools

Special tools refer to tools which are specially designed for assembling or disassembling some motorcycle parts on special positions. Applicable special tools are necessary for precise adjustment and installation. With them, parts and accessories can be mounted safely, reliably and rapidly, which improves efficiency and saves energy.

1. Tools for repairing the engine

Special tools are required for properly disassembling/assembling some engine parts.

Table and drawing (1-1, 1-2) of special tools for disassembling/assembling engine parts are as follows:

Table 1-1

Name	Remark
Special socket spanner	Used for assembling/disassembling bolts for flywheels, Fig. 1-3
Clutch clamp holder	Fig. 1-4
Flywheel puller	Fig. 1-5
Feeler gauge	Fig. 1-6
Bearing disassembly tools	Fig. 1-7
Bearing assembly tools	Fig. 1-8
Oil seal remover	Fig. 1-9
Handle for dismantling tools	Fig. 1-10
Piston pin pulling device	Fig. 1-11
Piston pin pliers	Fig. 1-12
Socket spanner for spark plug	Fig. 1-13
Clutch thickness measuring device	Fig. 1-14
Cylinder diameter measuring device	Fig. 1-15
Dial indicator	Measuring the inner diameter of piston pin, Fig. 1-16

Table 1-2 (continued)

Fig.1-3

Fig.1-4

Fig.1-5

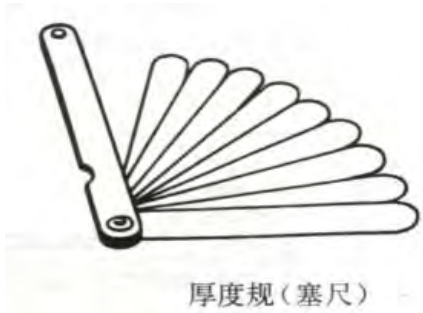

Fig.1-6厚度规（塞尺）：feeler gauge

Fig.1-7

Fig.1-8

Fig.1-9

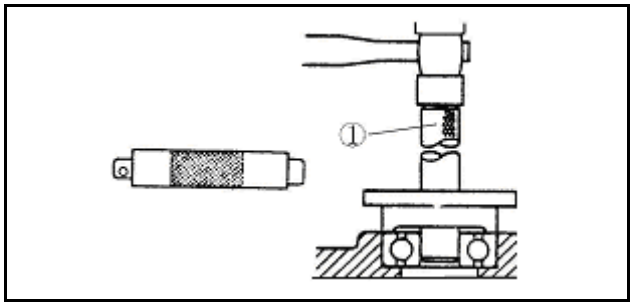

Fig.1-10

handle

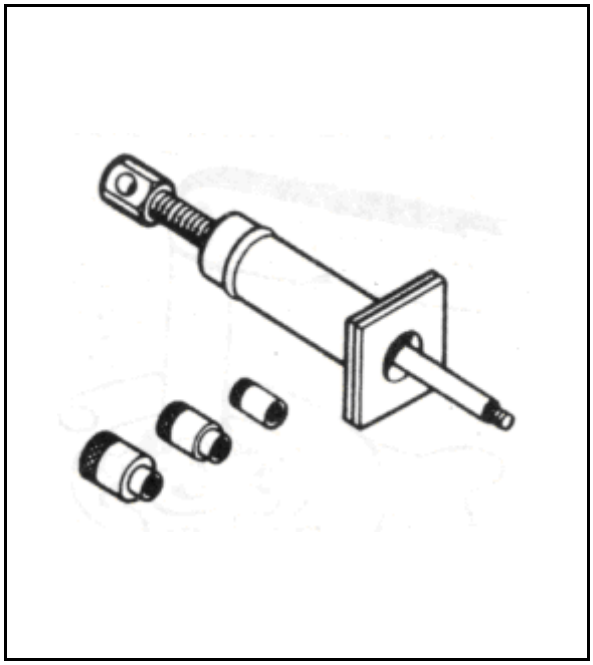

Fig.1-11

Fig.1-12

pliers piston

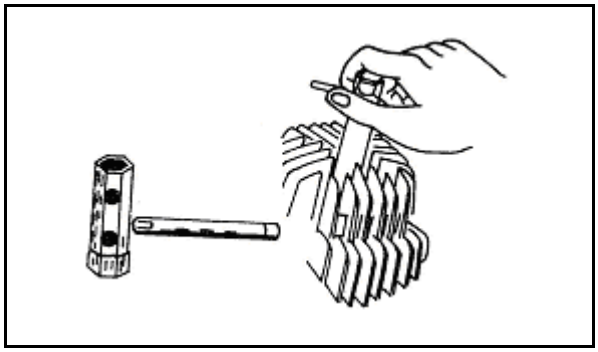

Fig.1-13

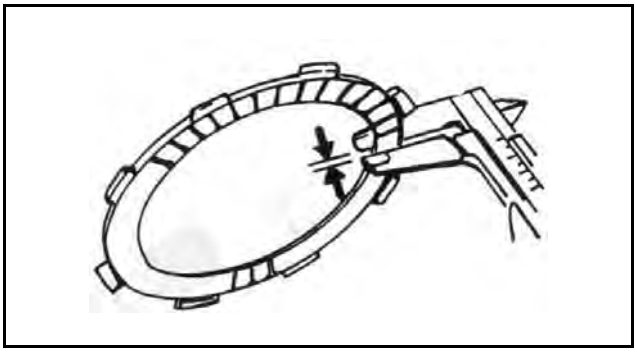

Fig.1-14

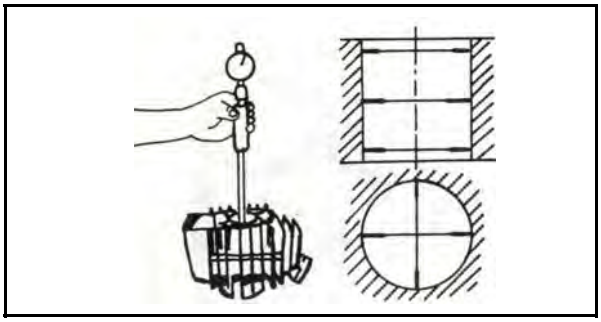

Fig.1-15

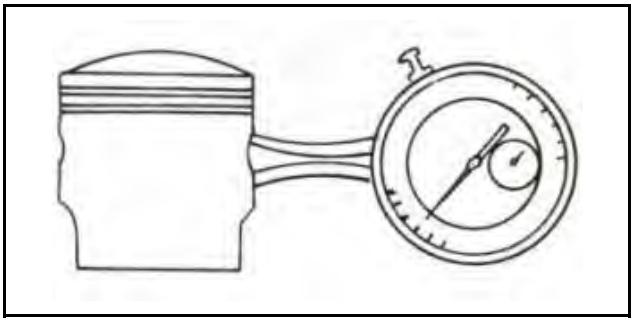

Fig.1-16

2. Tools for repairing the chassis

Table and drawing (1-17, 1-18) of ordinary tools and special tools for disassembling/assembling chassis parts are as follows:

Table 1-17

Name	Remark
Torque spanner	Fig. 1-19
Inner hexagon spanner	Fig. 1-20
Socket spanner	Fig. 1-21
Micrometer	Fig. 1-22
Magnetic rack, V-block	Fig. 1-23
Dial indicator	Fig. 1-24
Vernier calipers	Fig. 1-25
Circlip pliers	Fig. 1-26
Screwdriver with striking cap	Fig. 1-27
Tool for assembling oil seal of front fork	Fig. 1-28
Tool for hammering seal of front fork	Fig. 1-29
Steering nut spanner	Fig. 1-30

(1) Ordinary tools for repairing the chassis

Table 1-18 (continued)

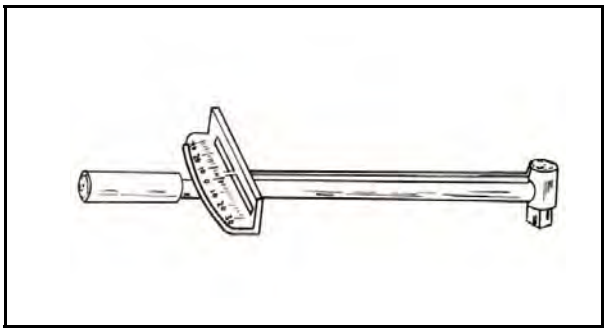

Fig. 1-19

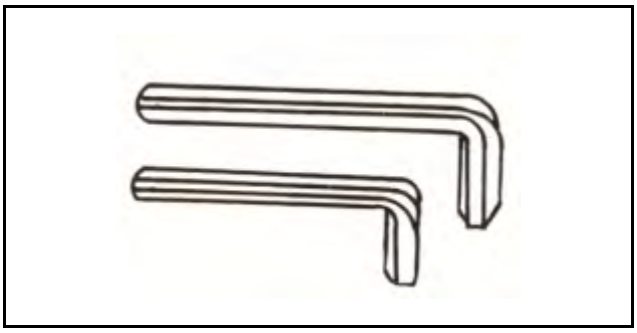

Fig. 1-20

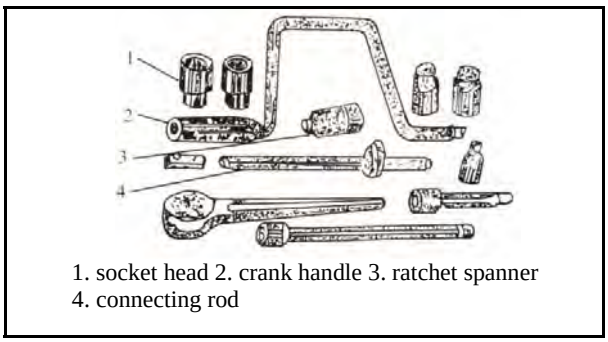

1. socket head 2. crank handle 3. ratchet spanner
4. connecting rod

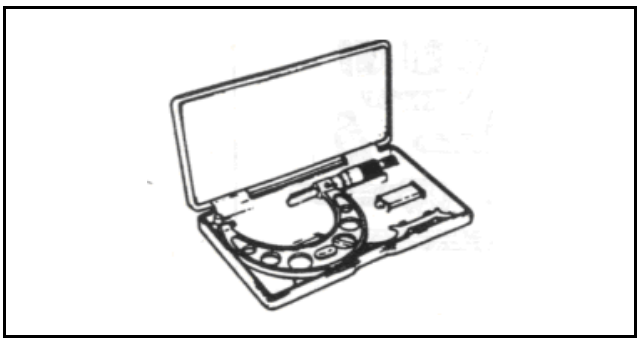

Fig. 1-21

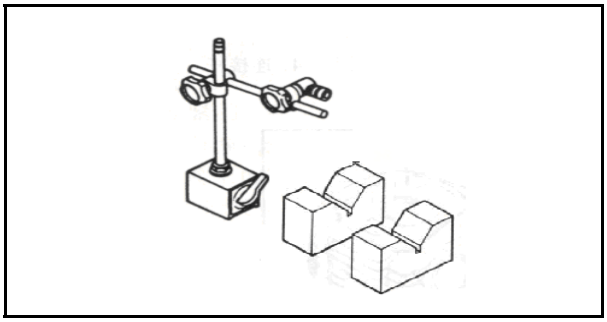

Fig. 1-22

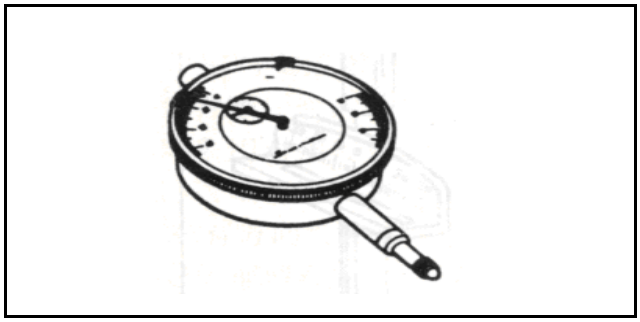

Fig. 1-23

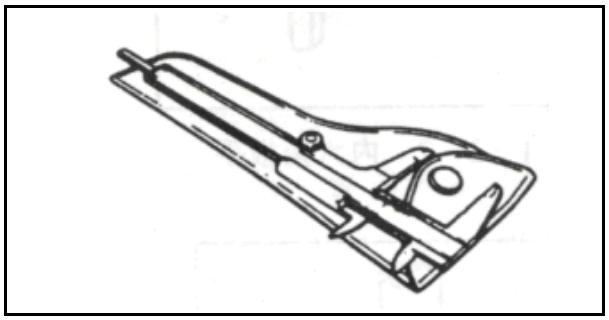

Fig. 1-24

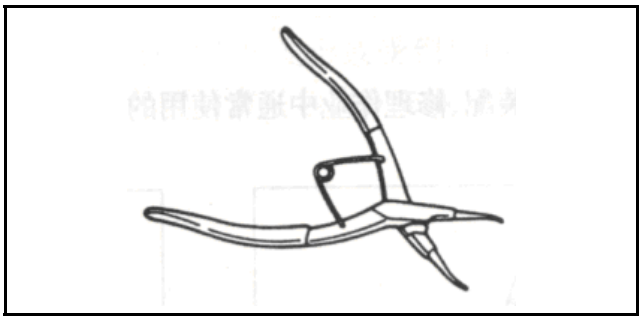

Fig. 1-25

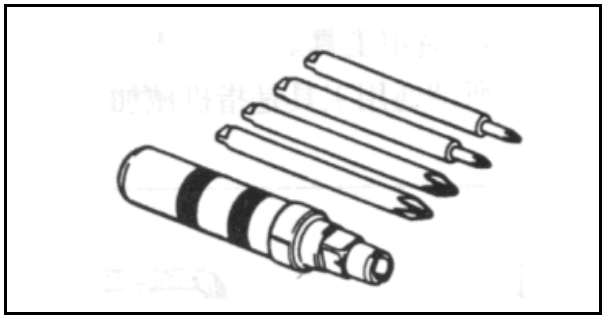

Fig. 1-26

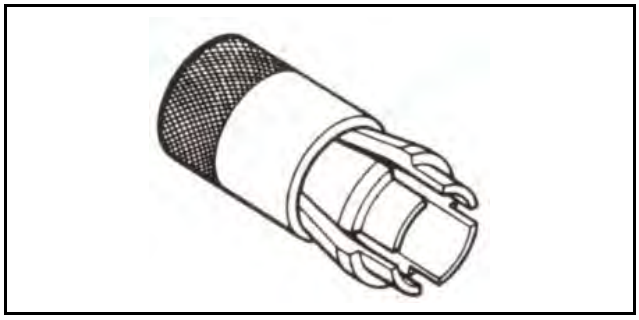

Fig. 1-27

Fig. 1-28

(2) Special tools for repairing the chassis: tool for hammering seal of front fork

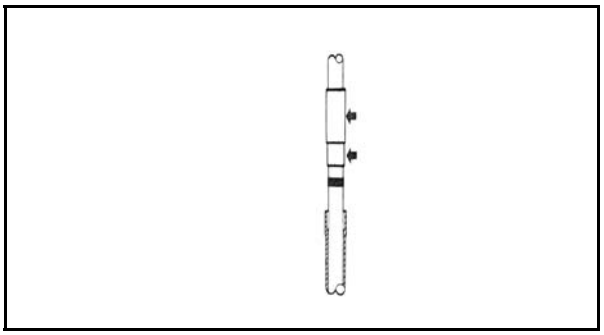

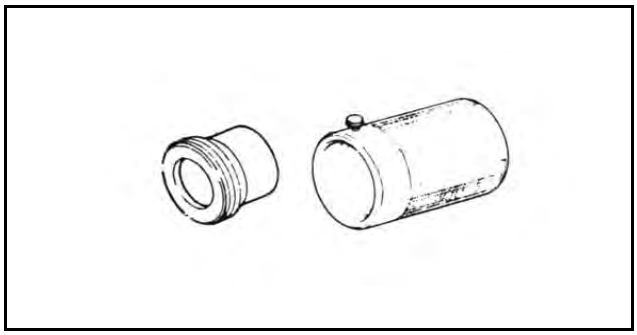

Fig. 1-29

(3) Steering nut spanner

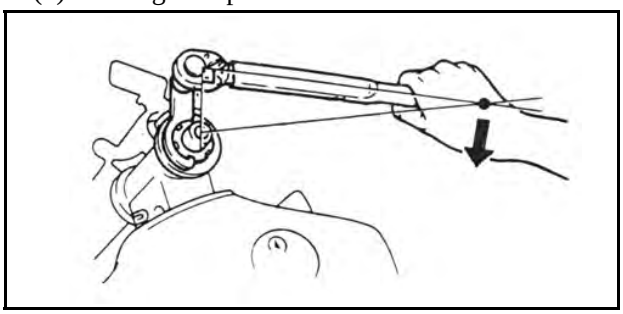

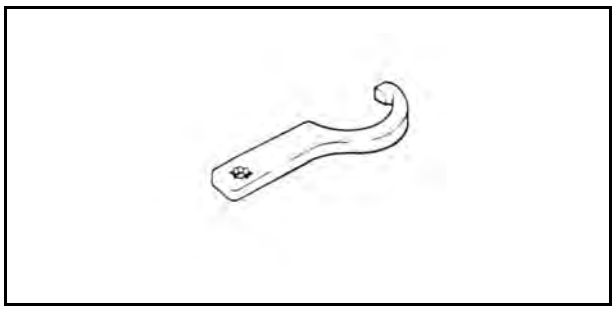

Fig. 1-30

3. Tools for electric parts

Table and drawings (1-31, 1-32) of special tools for testing electric parts are as follows:

Table 1-31

Name	Remark
Multimeter	Fig. 1-33
Ignition tester	Fig. 1-34

Table 1-32 (continued)

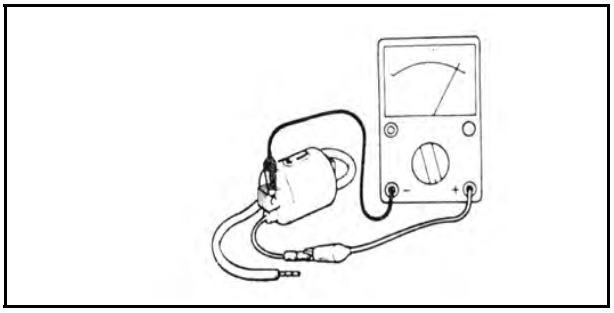

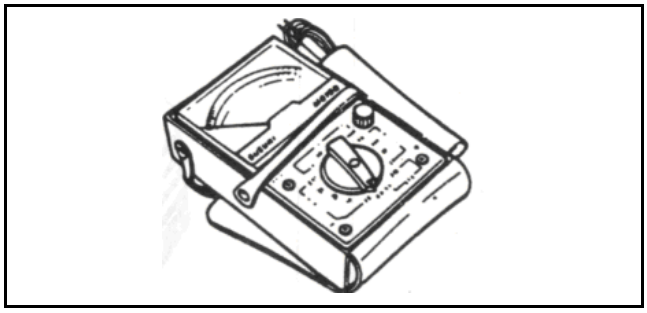

Fig. 1-33

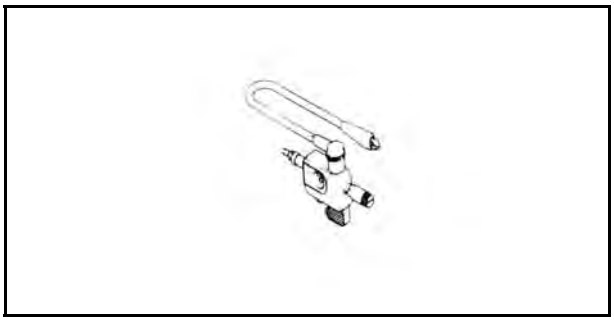

Fig. 1-34

Specification (FACT 50 4T25Km)

Model	**FACT 50 4T**		**Engine**	**Engine type**	QJ137QMB
Length mm	1800			Fuel type	Unleaded petrol（92/95）
Width mm	700			No. of cylinder	1
Height mm	1150			ID × stroke	37mm×46.5mm
Wheelbase mm	1270			Total displacement	50cc
Weight kg (Curb weight)	**Forward shaft**	37		Startup	Electric/kick
	Backshaft	55		Cooling	Air cooling

		Total	92
Tire Size		Front outer tire	120/70-12
		Front rim	3.50×12
		Rear outer tire	130/70-12
		Rear rim	3.50×12
Transmission gear	Clutch	Dry centrifugal clutch	
	Variable speed gear	Stepless	
	Transmission	Belt transmission	
Electric devices	Battery capacity/type	12V-4AH/ dry-charged	
	Magnetor capacity	89.6W/5000rpm	
	Spark plug	BR7ES（NGK）	
	Spark plug gap	0.6-0.8mm	
	Ignition	CDI	

	Lubrication	Splash lubrication
	Air filter	e9QJAF-B70
	Capacity of gasoline tank	6.0±0.2L
	Carburetor type	PD19JB
Performance	Idle speed - rpm	1800±100rpm/min
	Max. torque	3.05N.m/3000rpm
	Max. Hp	1.24kW/4000rpm
	Compression ratio	6.9：1
	Max. speed	25km/h
Braking system	Dia. of front brake disc (mm)	φ190mm
	I.D. of rear brake drum (mm)	φ110mm

Specification (FACT 50 4T45Km)

Model	**FACT 50 4T**	
Length mm	1800	
Width mm	700	
Height mm	1150	
Wheelbase mm	1270	
Weight kg	**Forward shaft**	37

Engine	**Engine type**	QJ137QMB
	Fuel type	Unleaded petrol（92/95）
	No. of cylinder	1
	ID × stroke	37mm×46.5mm
	Total displacement	50cc
	Startup	Electric/kick

(Curb weight)		**Backshaft**	55		Cooling	Air cooling
		Total	92		Lubrication	Splash lubrication
Tire Size		Front outer tire	120/70-12			
		Front rim	3.50×12		Air filter	e9QJAF-B70
		Rear outer tire	130/70-12			
		Rear rim	3.50×12		Capacity of gasoline tank	6.0±0.2L
Transmission gear	Clutch	Dry centrifugal clutch			Carburetor type	PD19JB
	Variable speed gear	Stepless		**Performance**	Idle speed - rpm	1800±100rpm/min
	Transmission	Belt transmission			Max. torque	4.55N.m/5200rpm
Electric devices	Battery capacity/type	12V-4AH/ dry-charged			Max. Hp	2.63kW/5500rpm
	Magnetor capacity	89.6W/5000rpm			Compression ratio	6.9：1
	Spark plug	NGK CR6HSA			Max. speed	45km/h
	Spark plug gap	0.6-0.7mm		**Braking system**	Dia. of front brake disc (mm)	φ190mm
	Ignition	CDI			I.D. of rear brake drum (mm)	φ110mm

FACT 50 4T

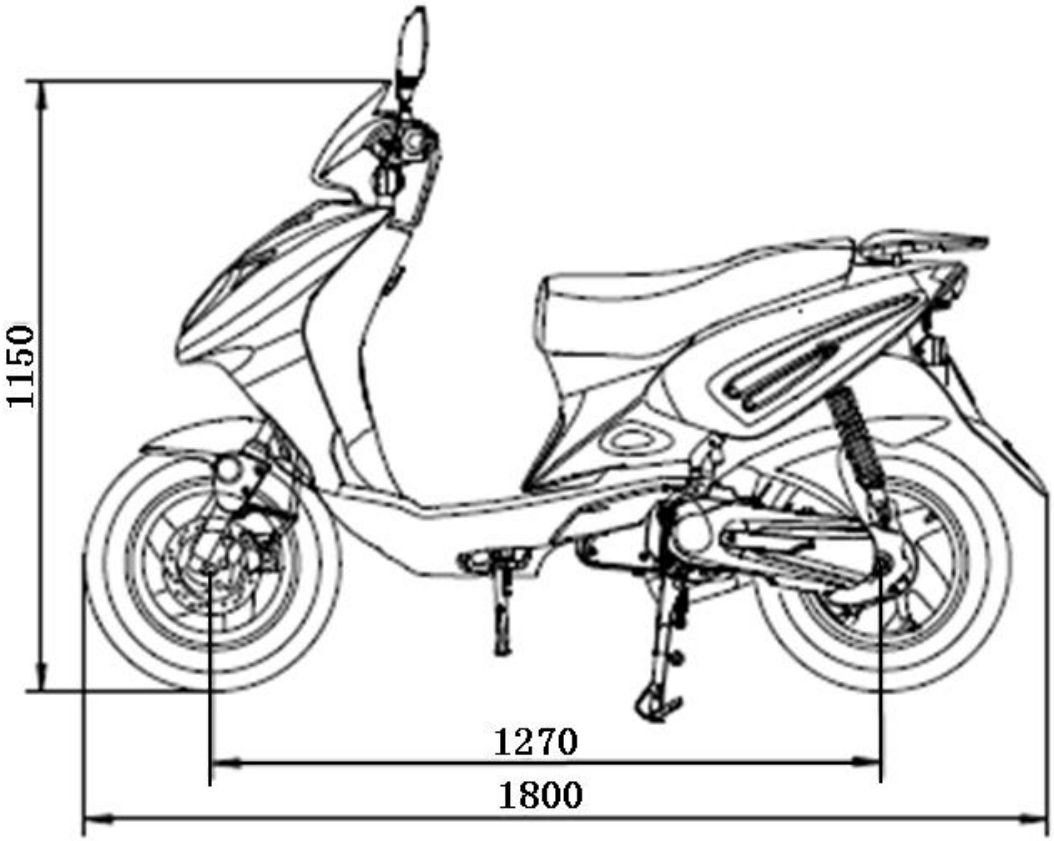

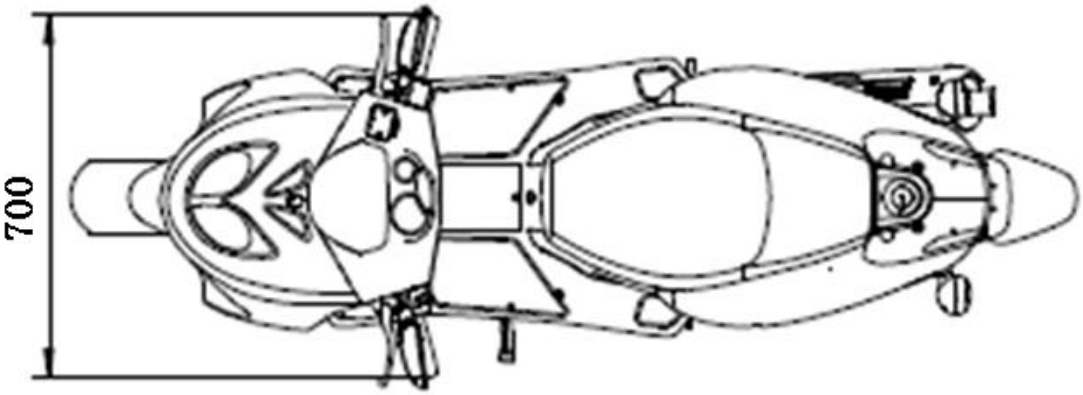

Failure Diagnosis

Diagnosis on failure or difficulty in starting engine

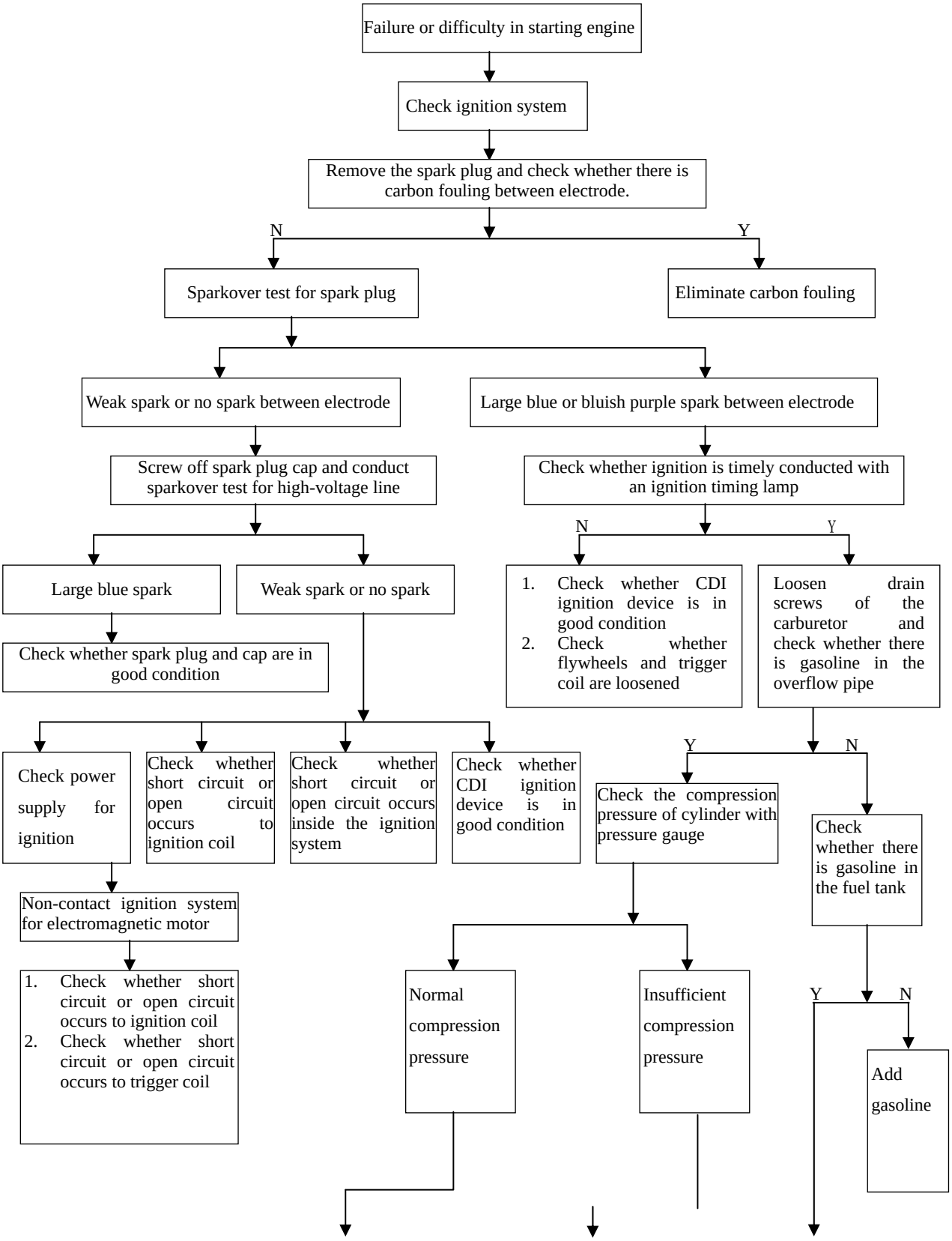

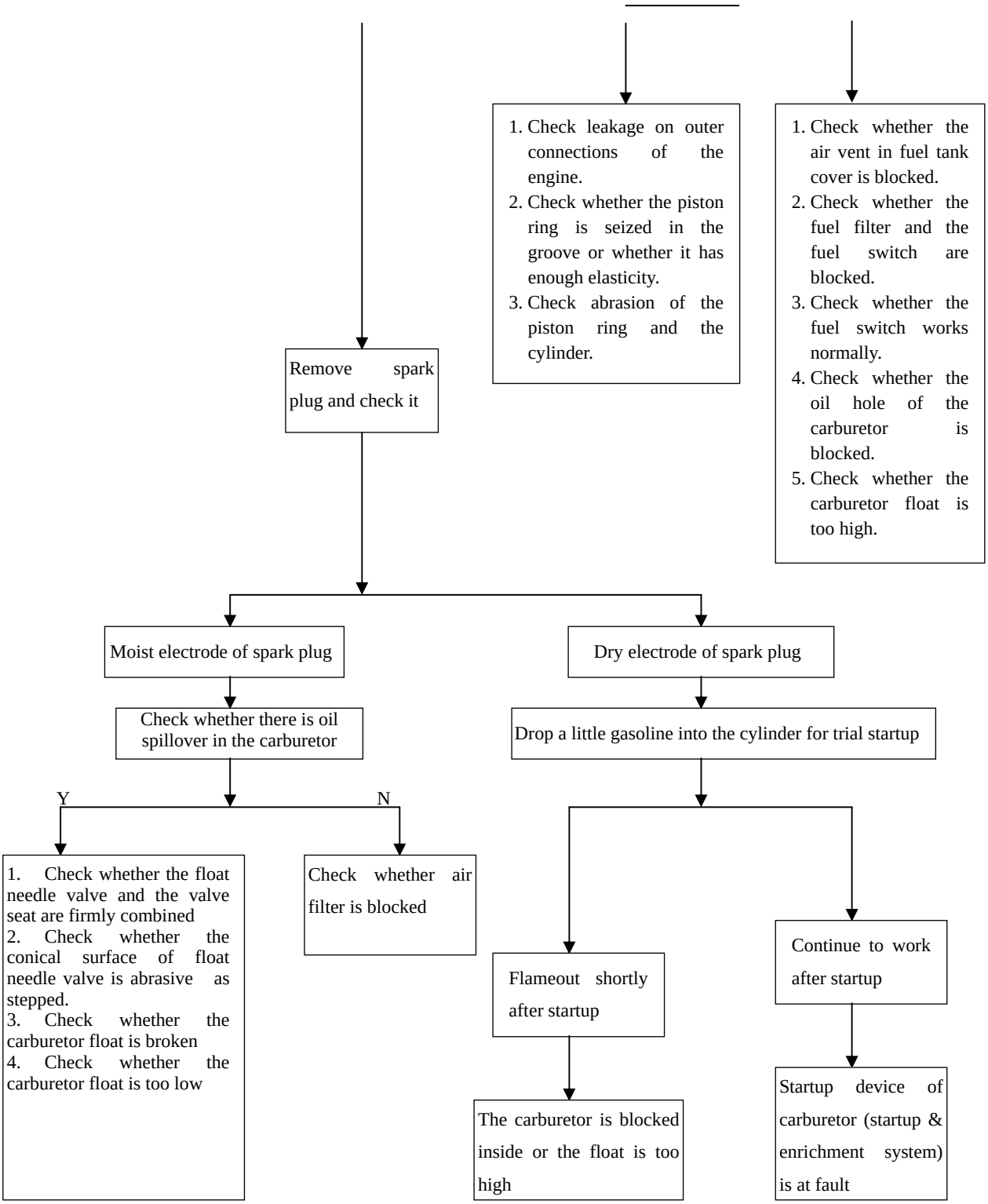
1. Check leakage on outer connections of the engine.
2. Check whether the piston ring is seized in the groove or whether it has enough elasticity.
3. Check abrasion of the piston ring and the cylinder.
1. Check whether the air vent in fuel tank cover is blocked.
2. Check whether the fuel filter and the fuel switch are blocked.
3. Check whether the fuel switch works normally.
4. Check whether the oil hole of the carburetor is blocked.
5. Check whether the carburetor float is too high.
Remove spark plug and check it
Moist electrode of spark plug
Dry electrode of spark plug
Check whether there is oil spillover in the carburetor
Drop a little gasoline into the cylinder for trial startup
Y
N
1. Check whether the float needle valve and the valve seat are firmly combined
2. Check whether the conical surface of float needle valve is abrasive as stepped.
3. Check whether the carburetor float is broken
4. Check whether the carburetor float is too low
Check whether air filter is blocked
Flameout shortly after startup
Continue to work after startup
The carburetor is blocked inside or the float is too high
Startup device of carburetor (startup & enrichment system) is at fault

Diagnosis on engine overheating

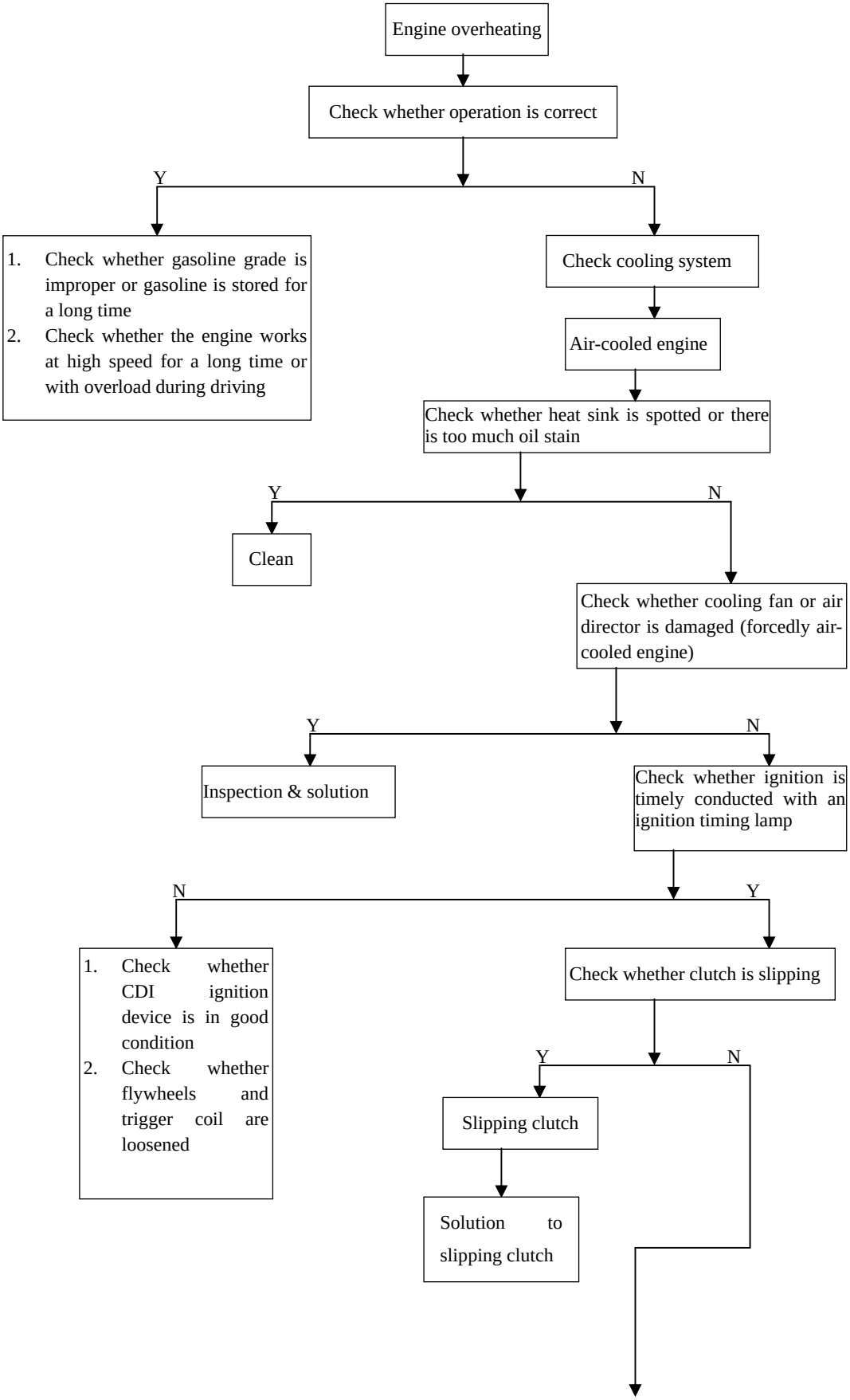

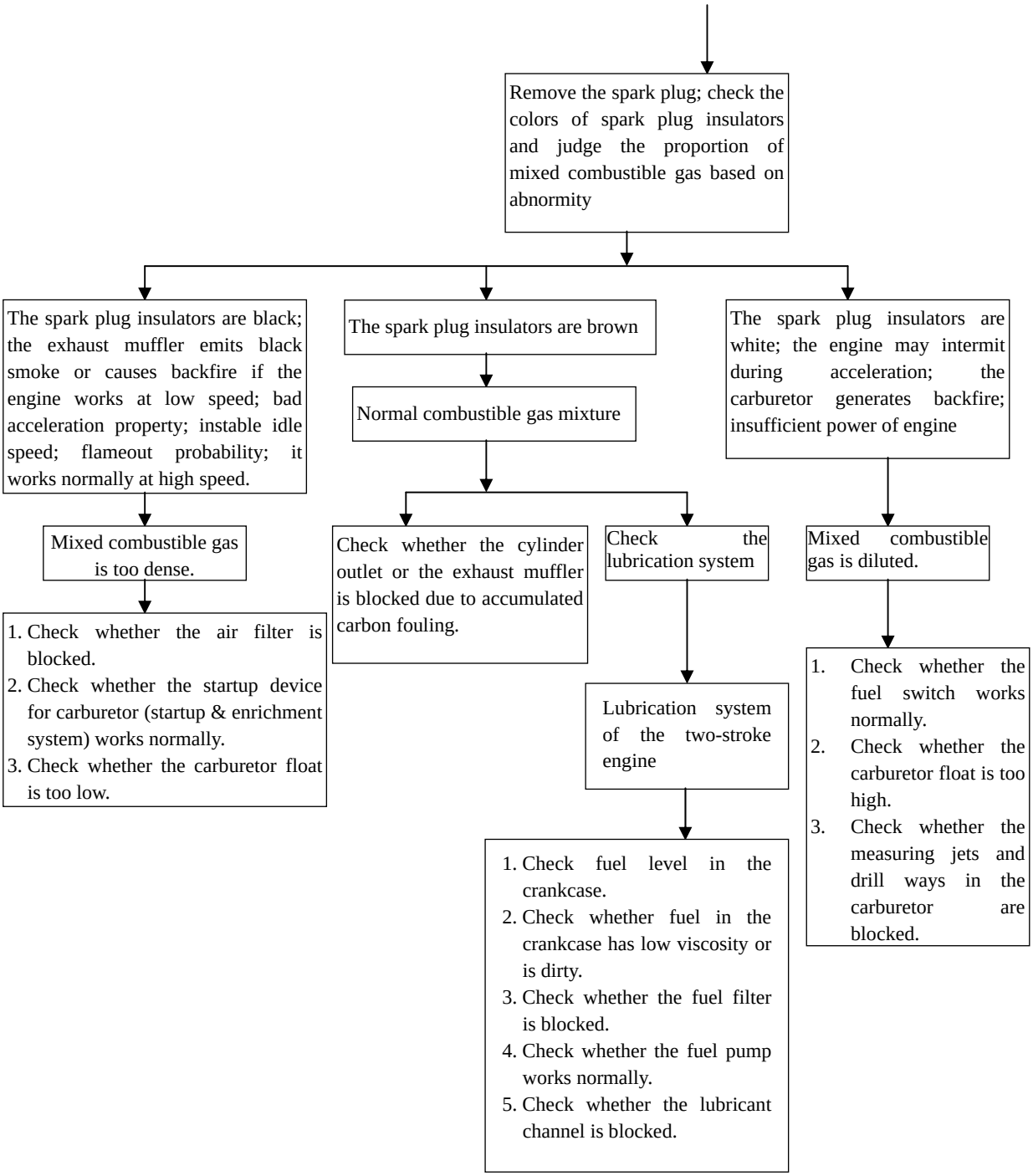
Remove the spark plug; check the colors of spark plug insulators and judge the proportion of mixed combustible gas based on abnormity
The spark plug insulators are black; the exhaust muffler emits black smoke or causes backfire if the engine works at low speed; bad acceleration property; instable idle speed; flameout probability; it works normally at high speed.
The spark plug insulators are brown
The spark plug insulators are white; the engine may intermit during acceleration; the carburetor generates backfire; insufficient power of engine
Normal combustible gas mixture
Mixed combustible gas is too dense.
Check whether the cylinder outlet or the exhaust muffler is blocked due to accumulated carbon fouling.
Check the lubrication system
Mixed combustible gas is diluted.
1. Check whether the air filter is blocked.
2. Check whether the startup device for carburetor (startup & enrichment system) works normally.
3. Check whether the carburetor float is too low.
Lubrication system of the two-stroke engine
1. Check whether the fuel switch works normally.
2. Check whether the carburetor float is too high.
3. Check whether the measuring jets and drill ways in the carburetor are blocked.
1. Check fuel level in the crankcase.
2. Check whether fuel in the crankcase has low viscosity or is dirty.
3. Check whether the fuel filter is blocked.
4. Check whether the fuel pump works normally.
5. Check whether the lubricant channel is blocked.

Diagnosis on power shortage of engine

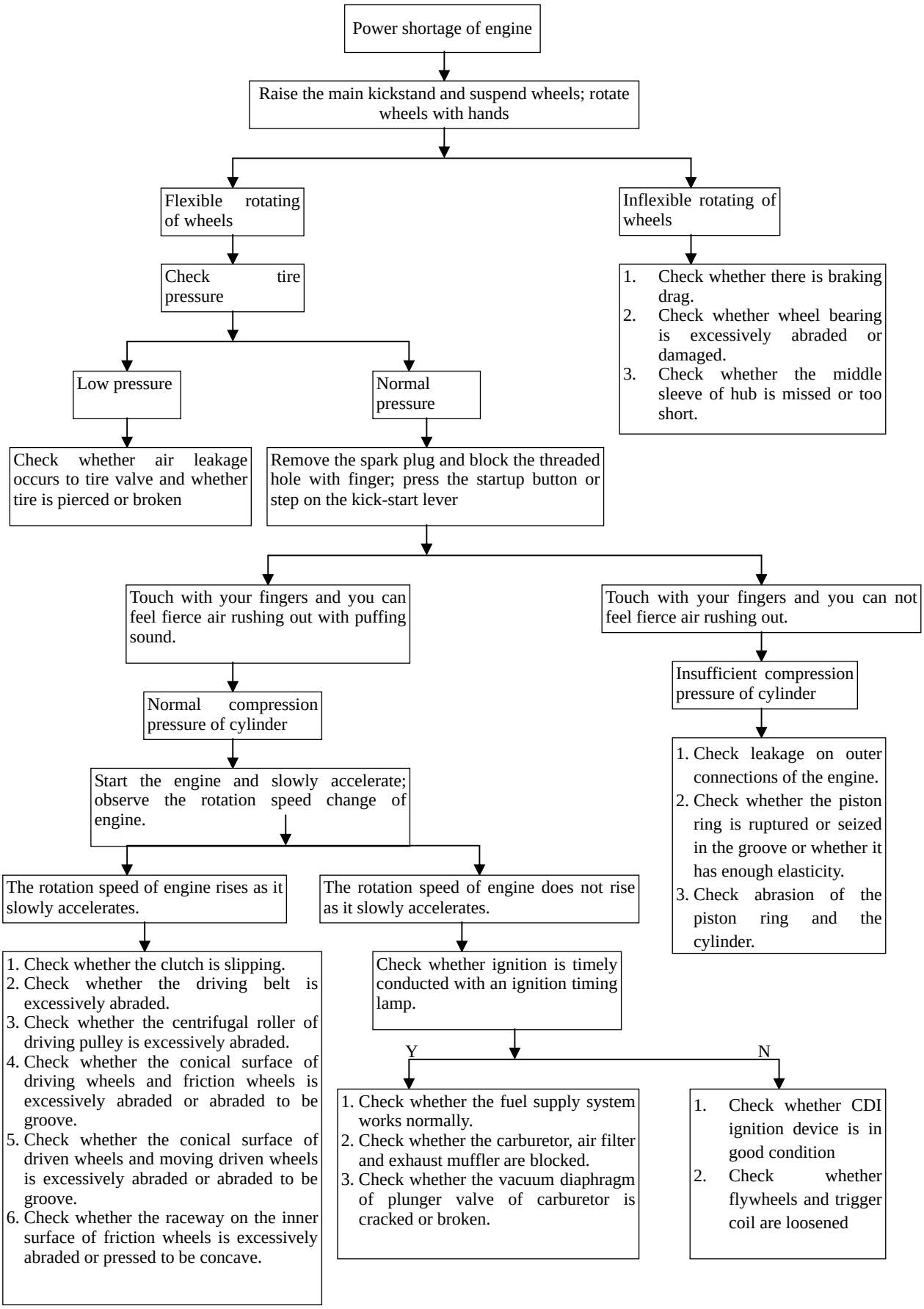

Diagnosis on abnormal idle speed of engine

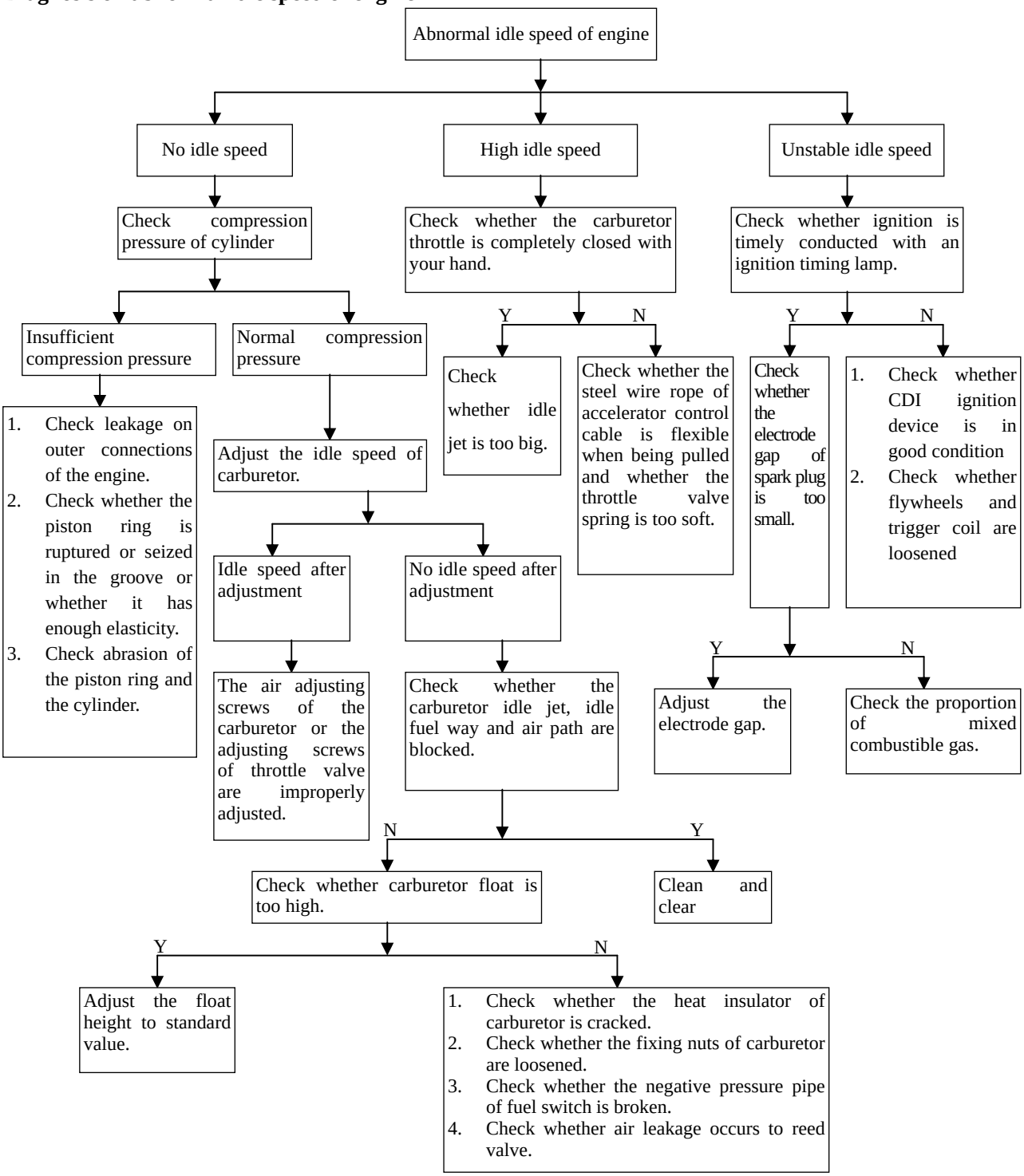

Diagnosis on excessive fuel consumption of engine

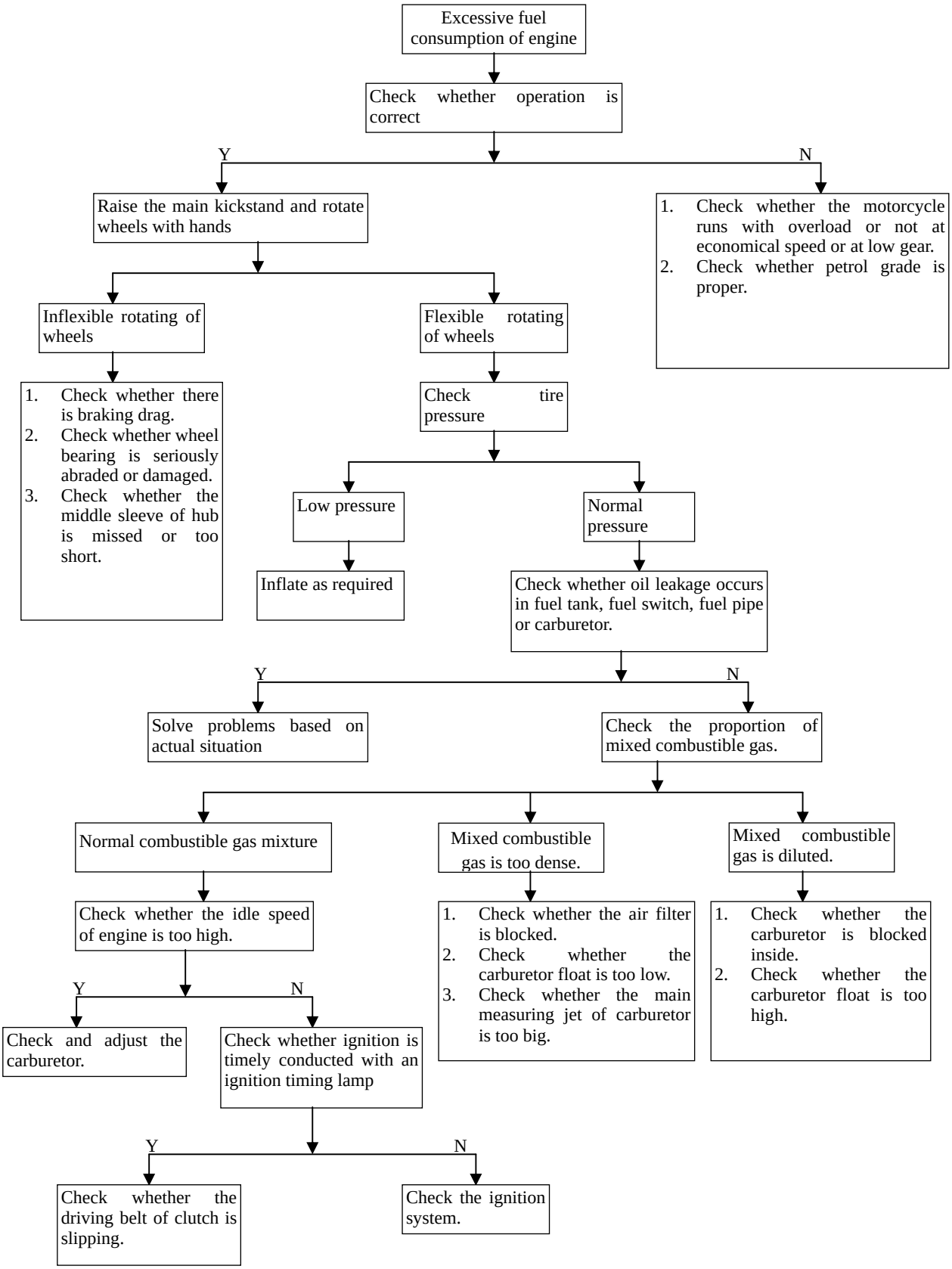

Diagnosis on dense bluish white smoke from the exhaust muffler of the two-stroke engine

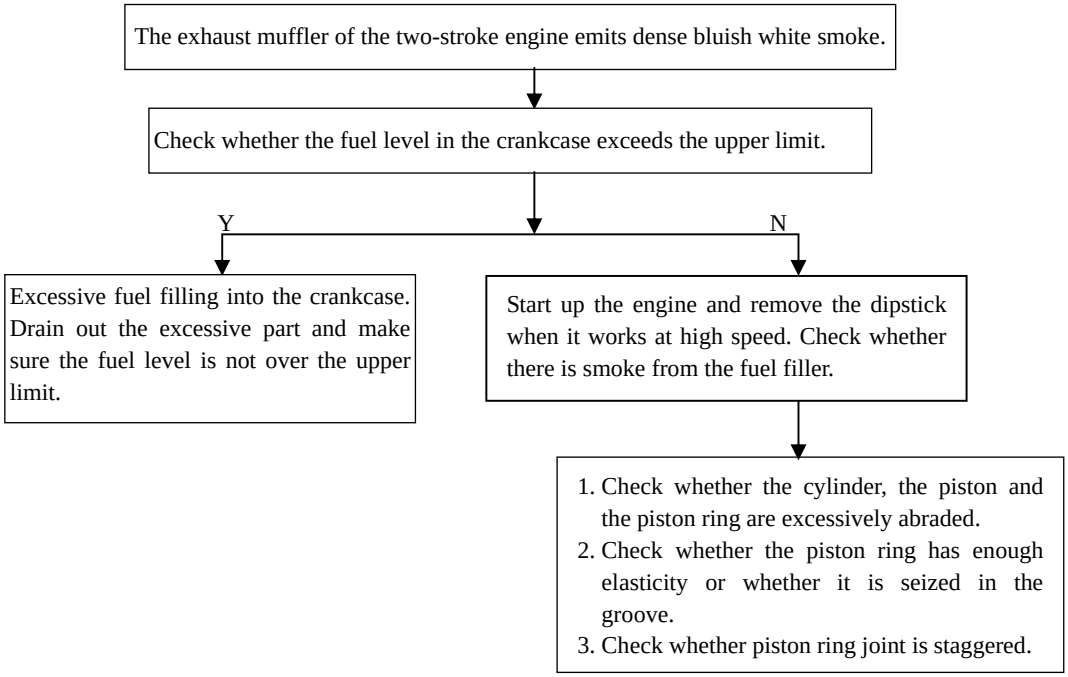

Diagnosis on difficulty in transmission shift

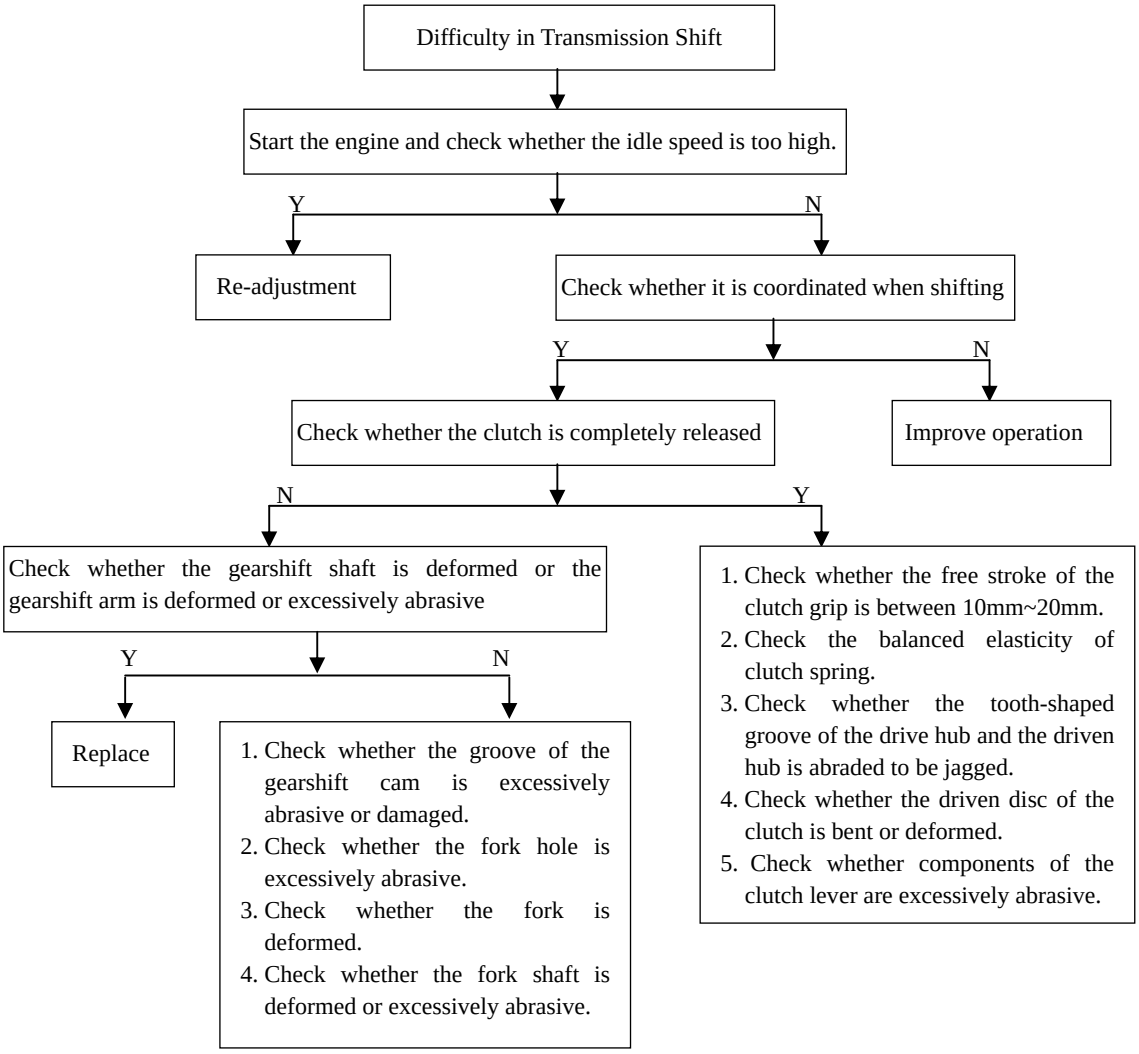

Diagnosis on transmission gear skip shift

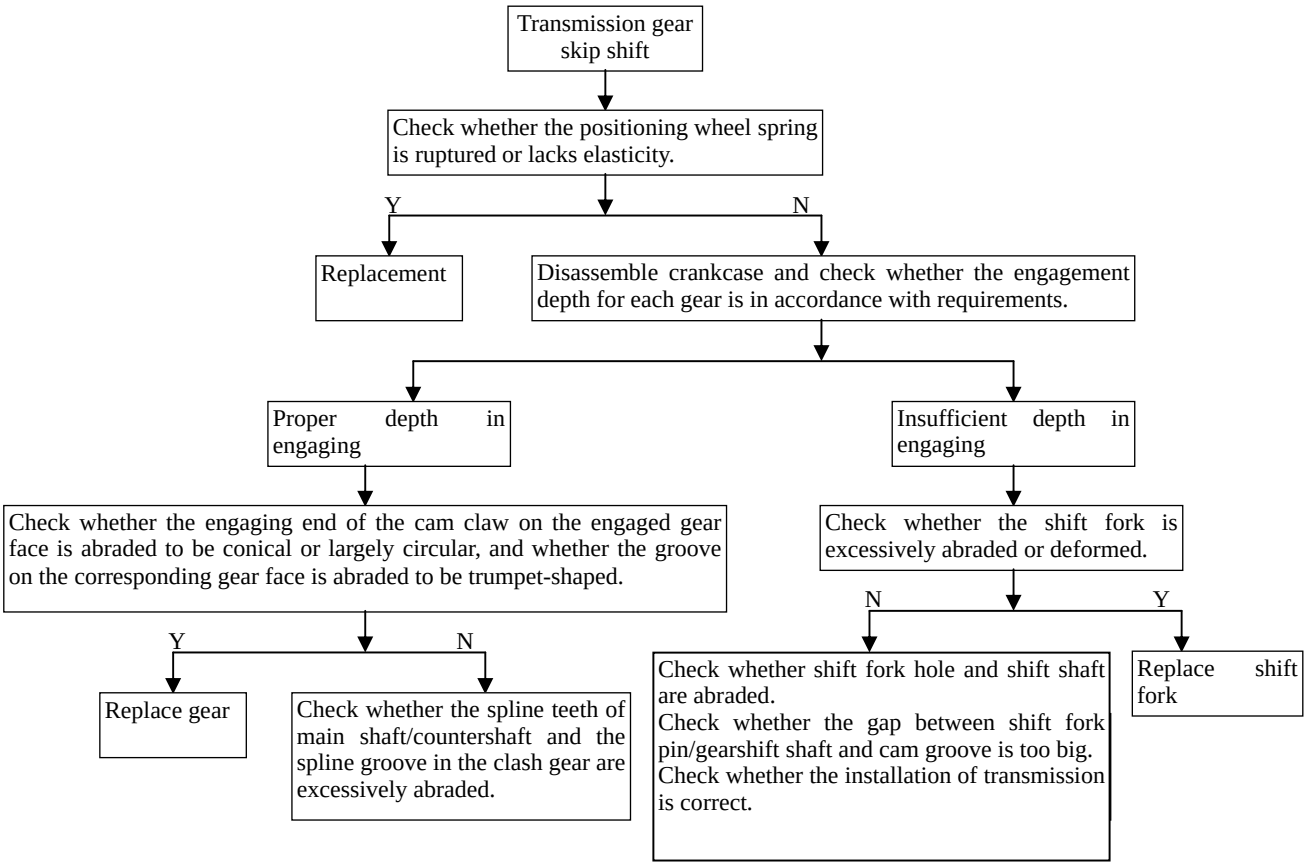

Diagnosis on clutch slipping

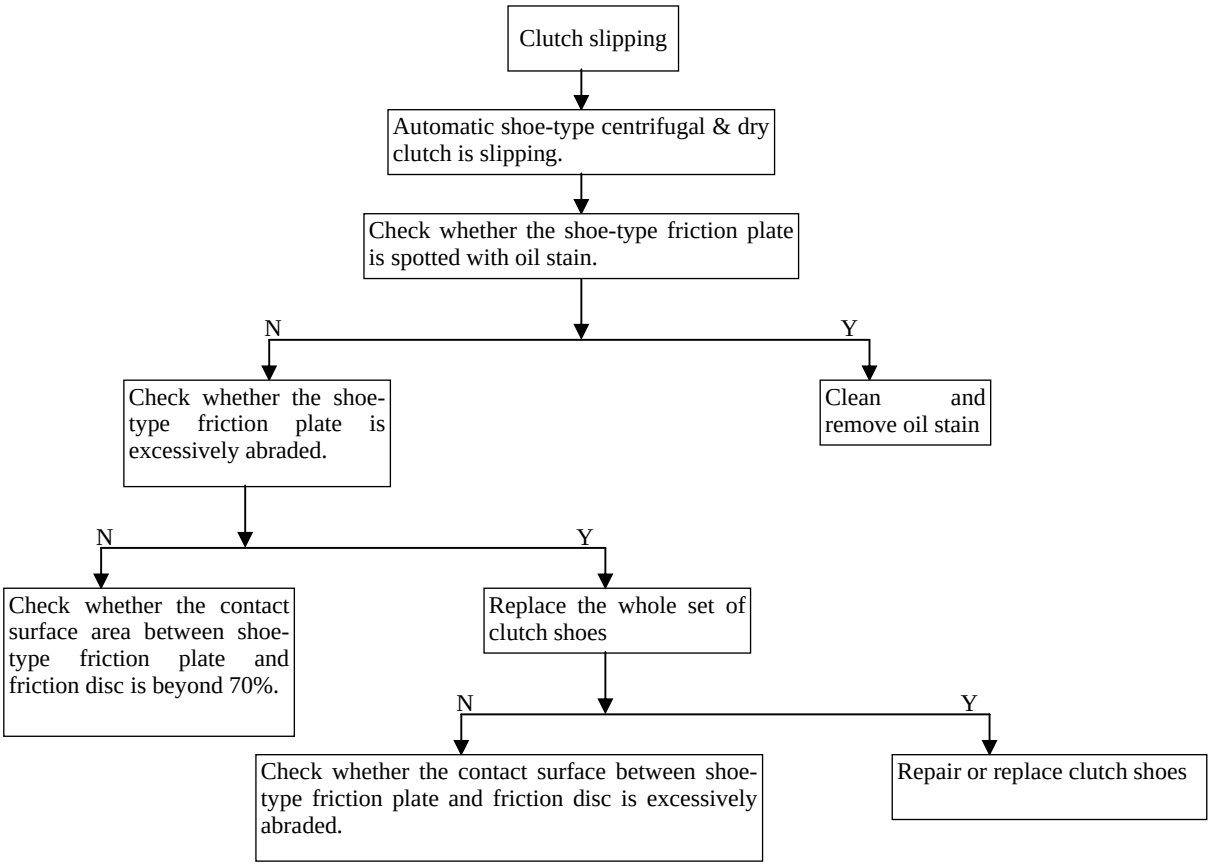

Diagnosis on malfunction of hydraulic disc brake

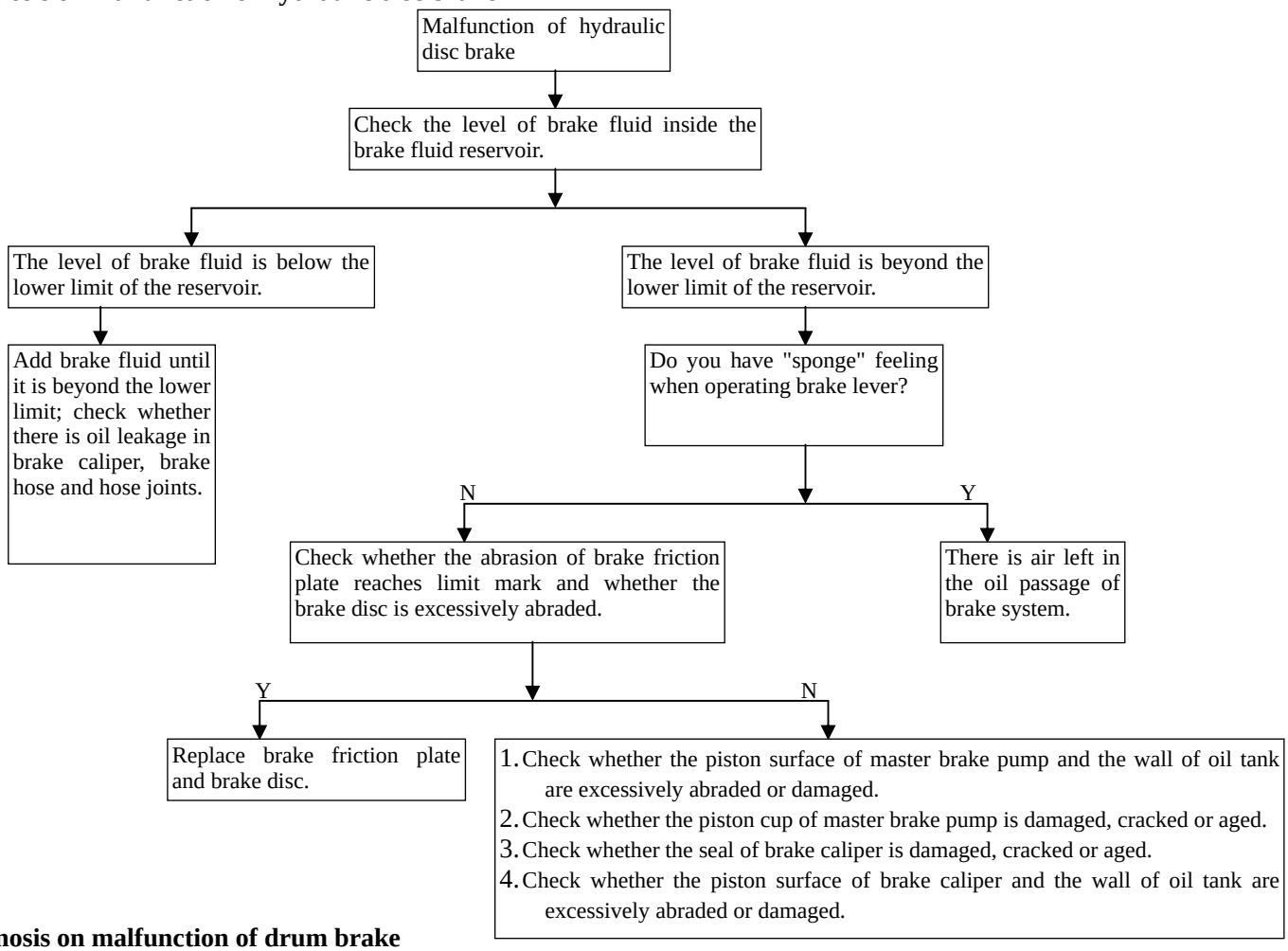

Diagnosis on malfunction of drum brake

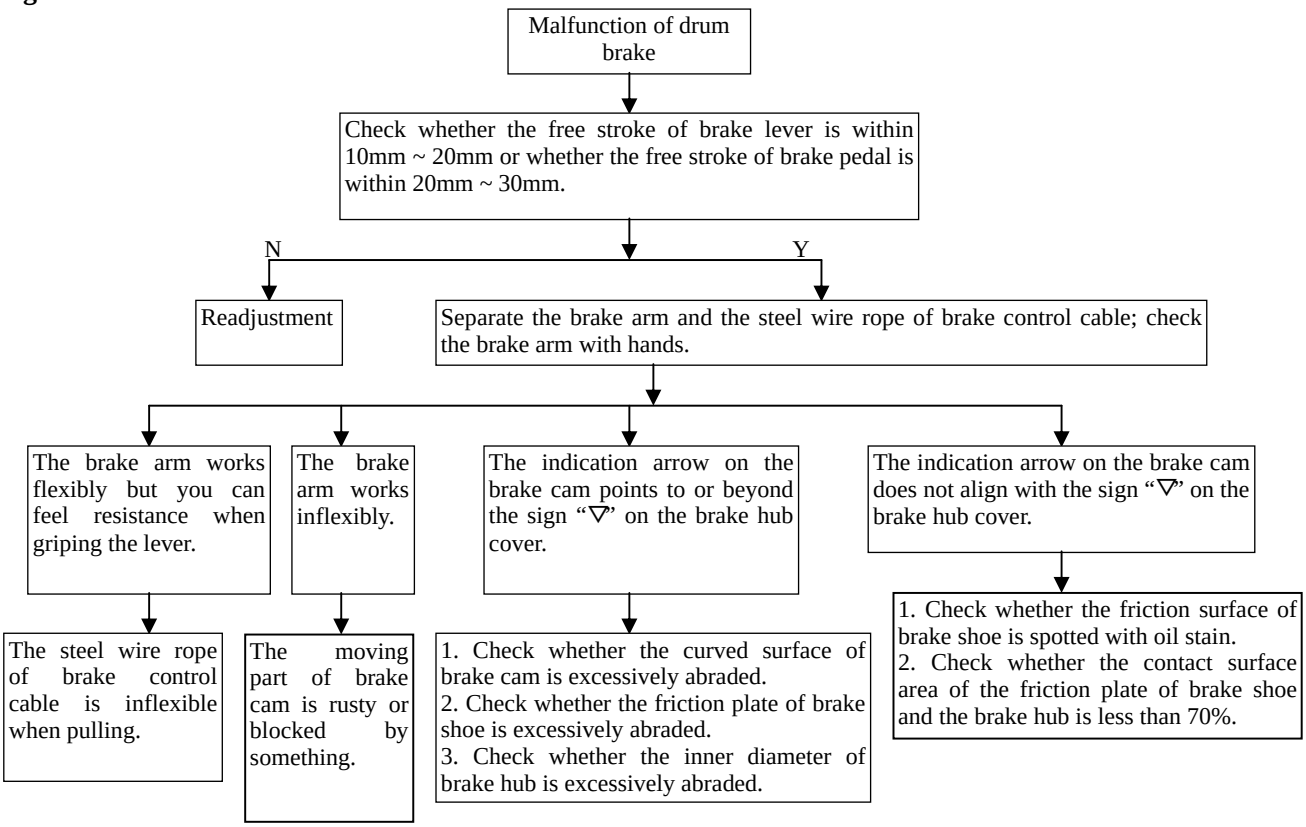

Diagnosis on battery charging failure

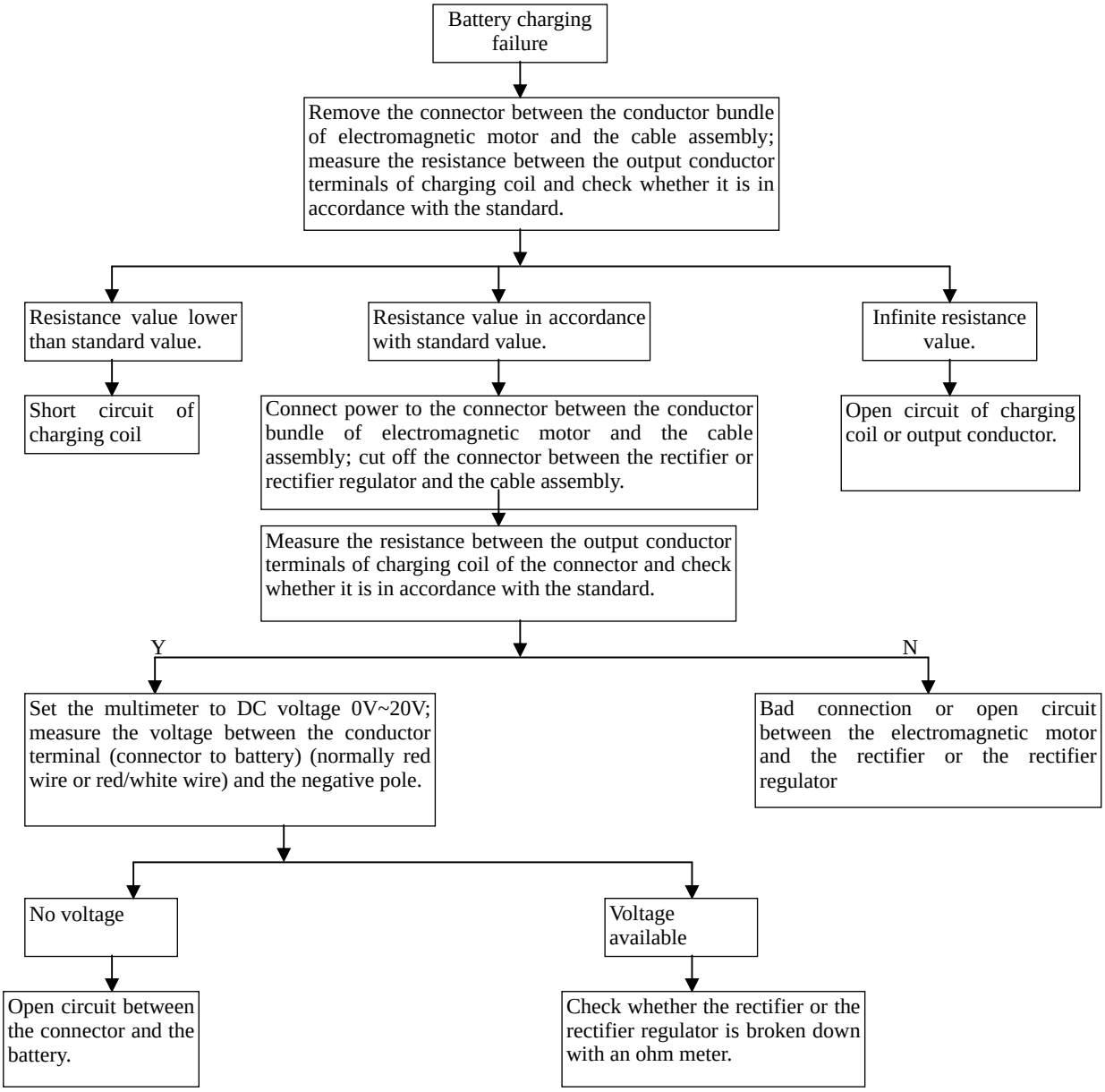

Diagnosis on insufficient battery charging

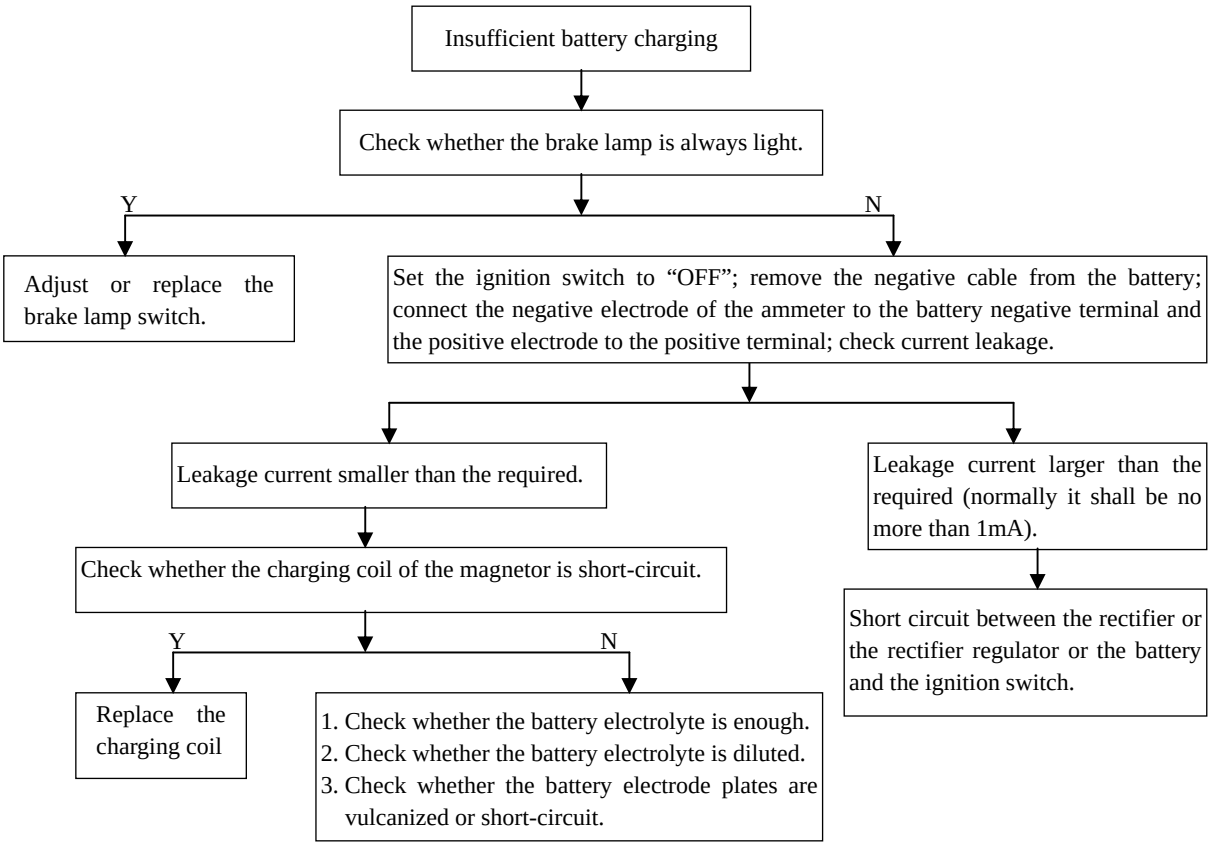

Diagnosis on starter motor failure in rotation

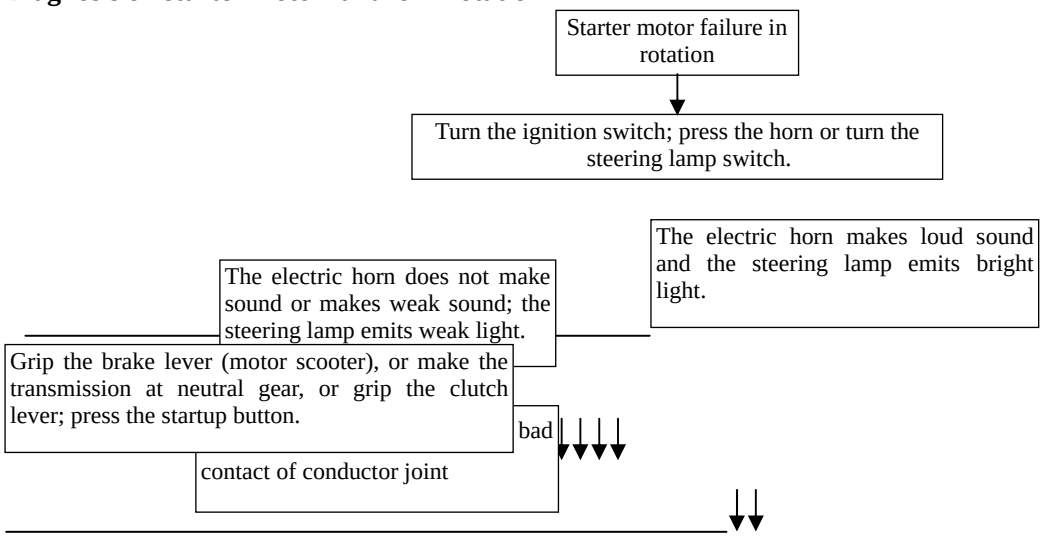

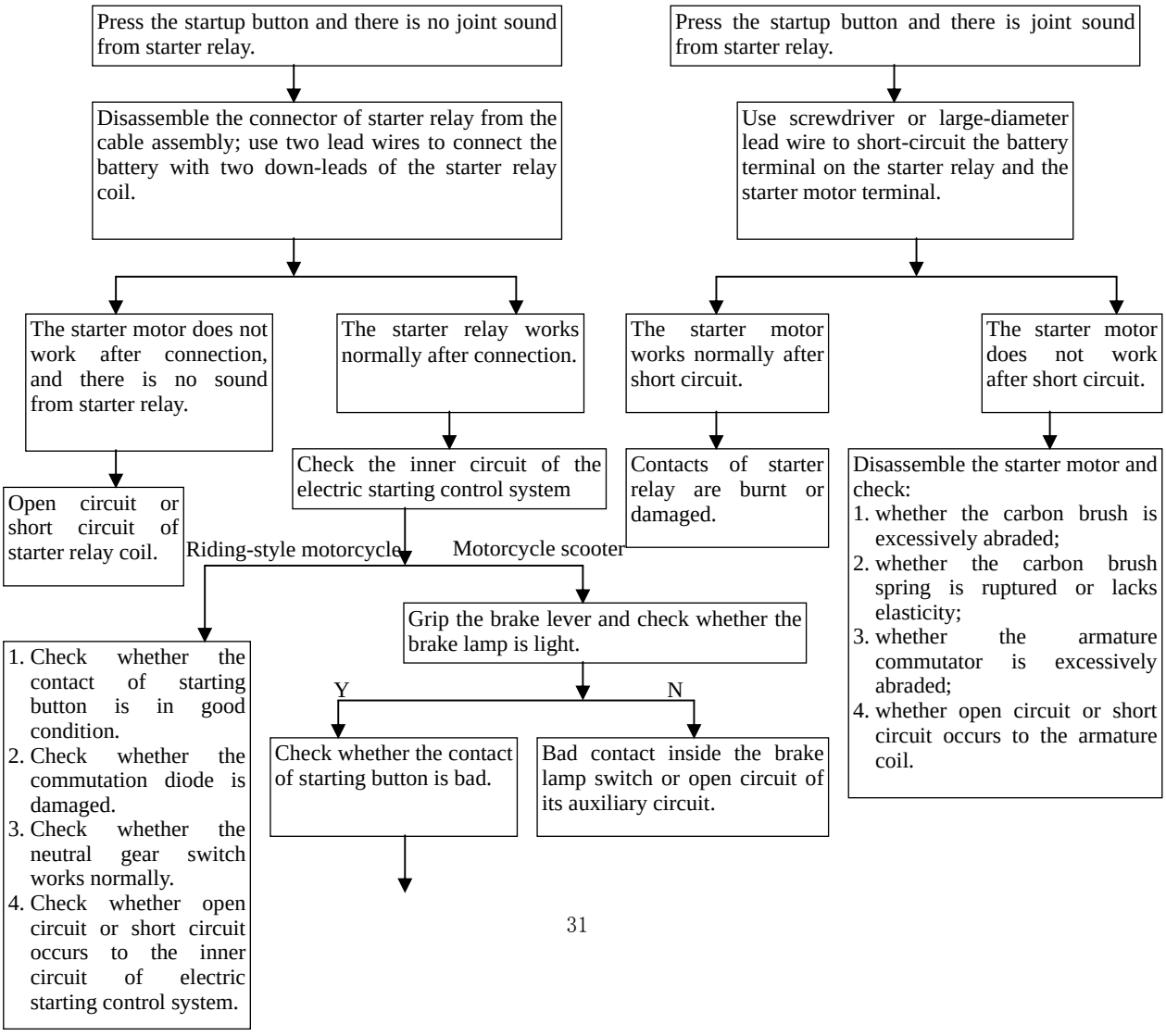

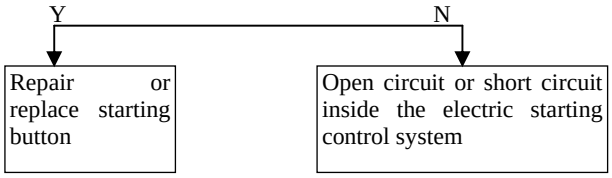

Diagnosis on starter motor running weak

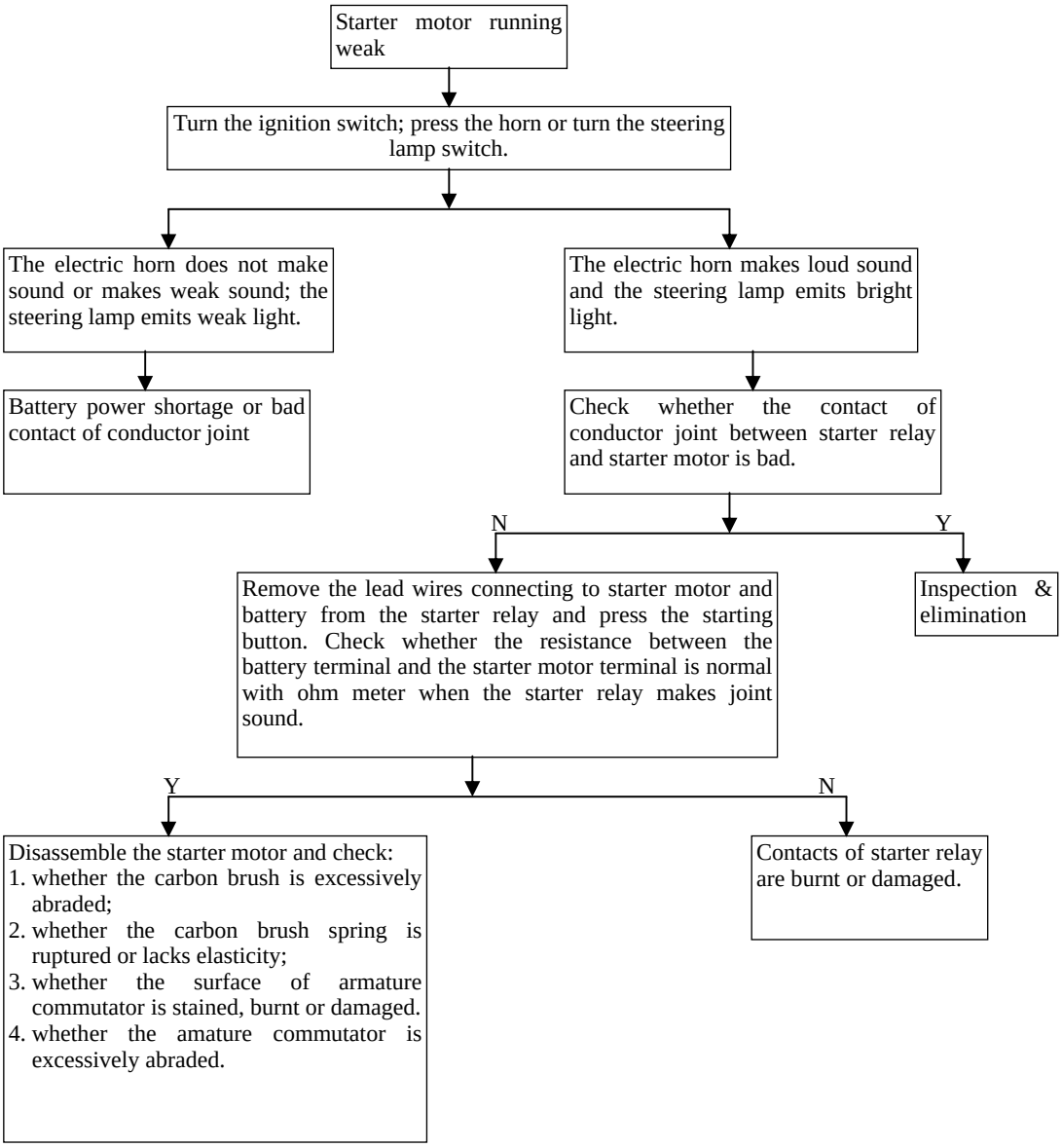

Diagnosis on motorcycle lamp failure in illumination

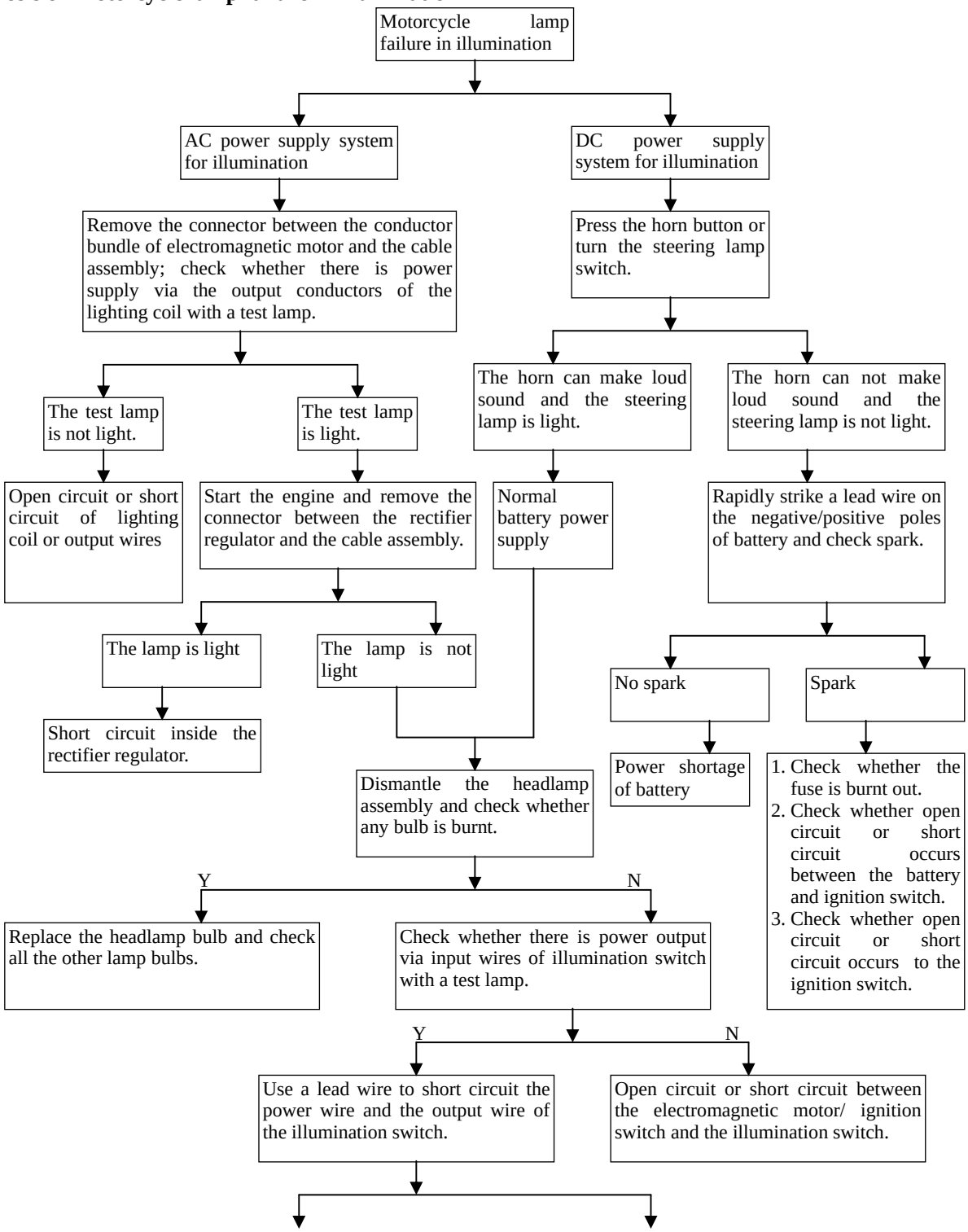

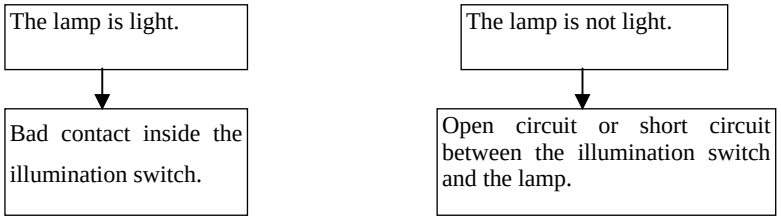

Diagnosis on burnt-out bulbs

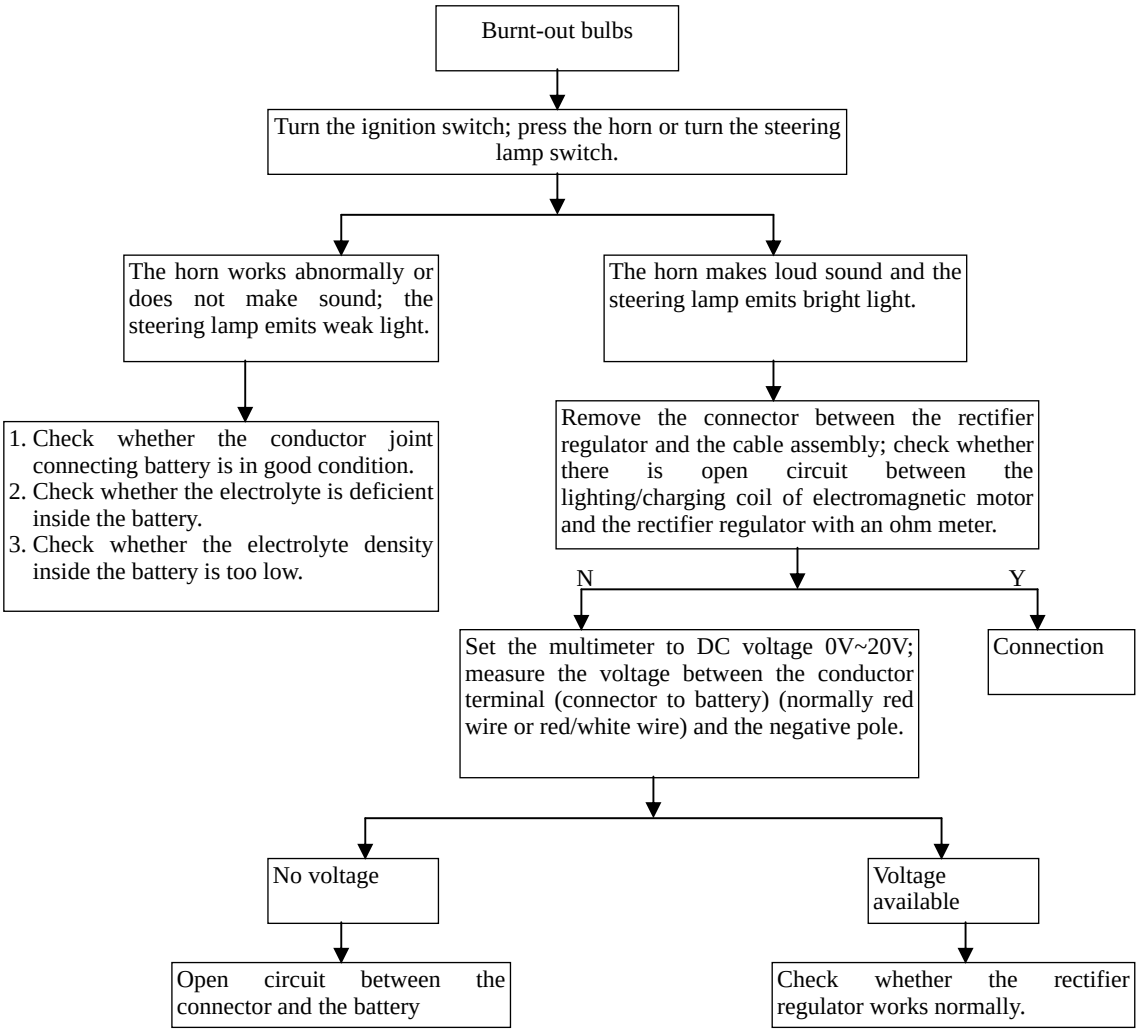

Diagnosis on weak light from lamps

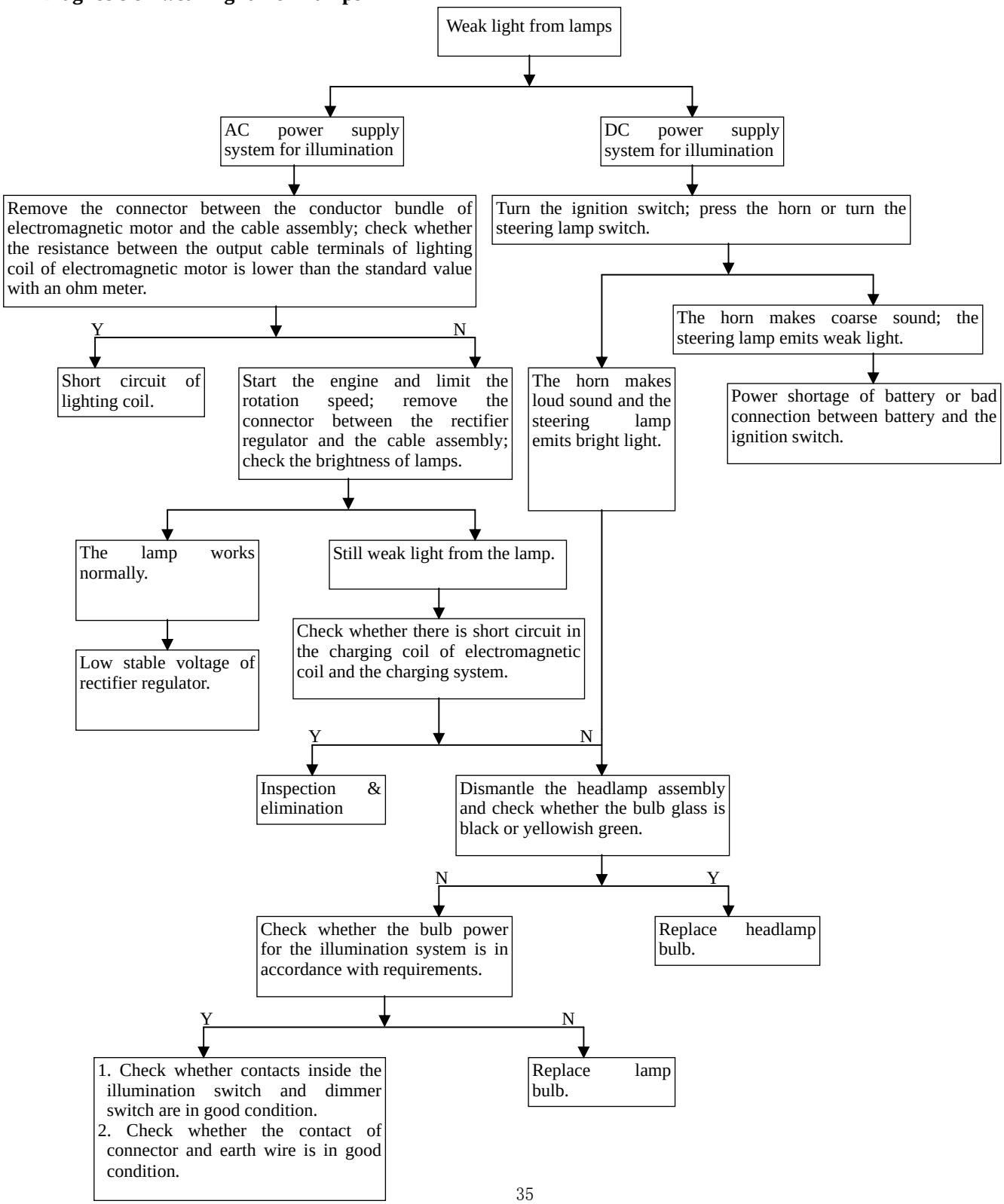

Diagnosis on steering lamp failure in illumination

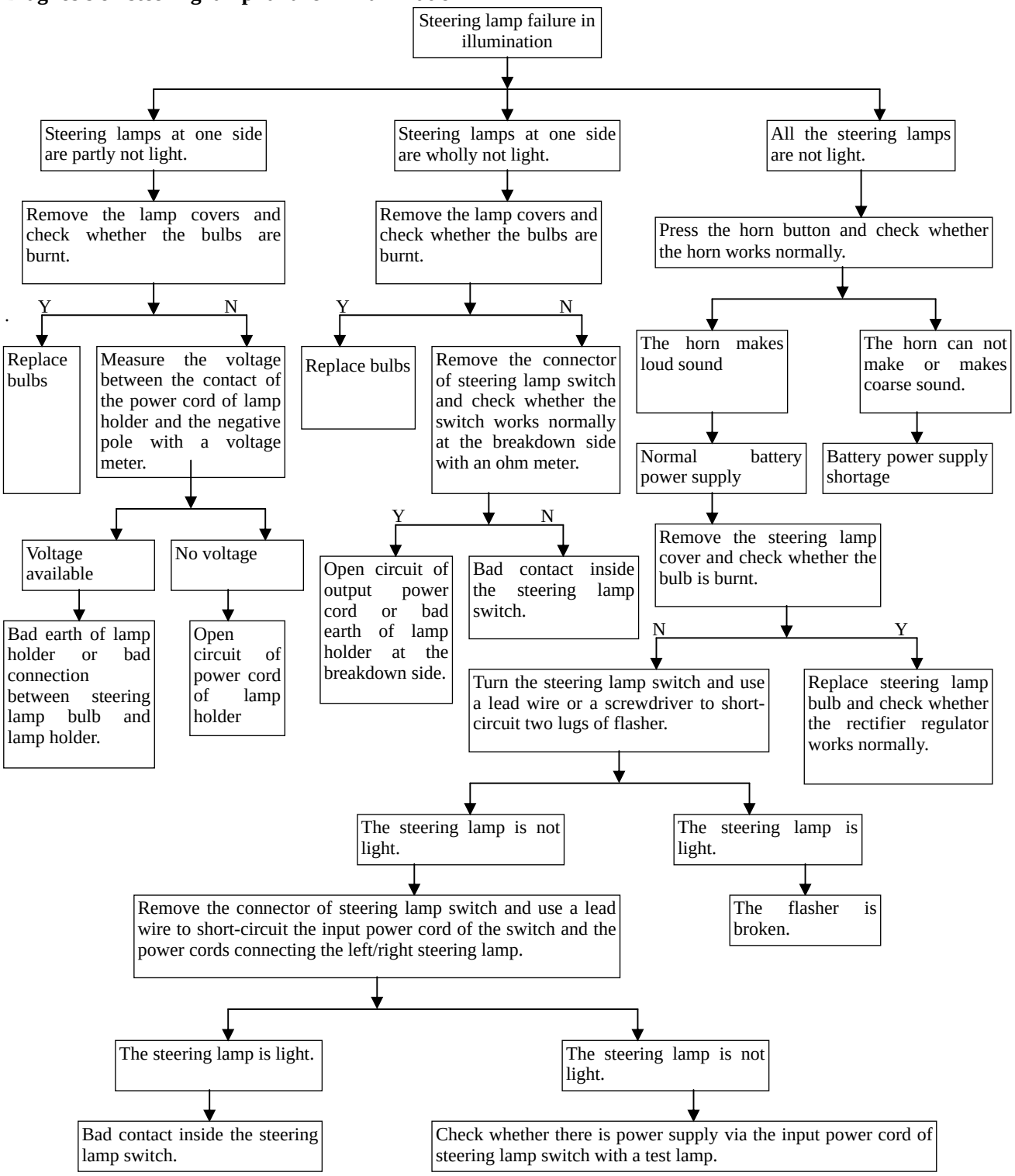

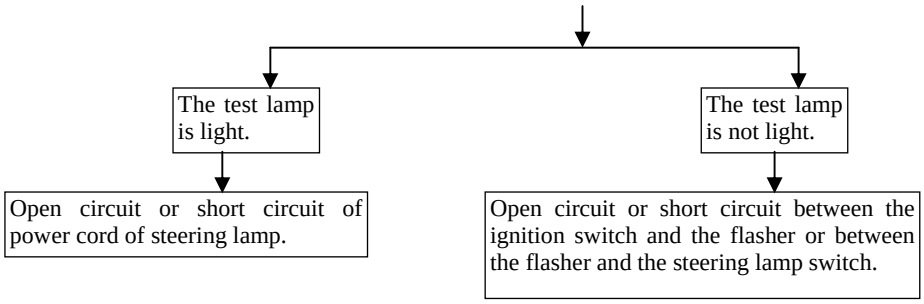

Diagnosis on electric horn failure in making sound

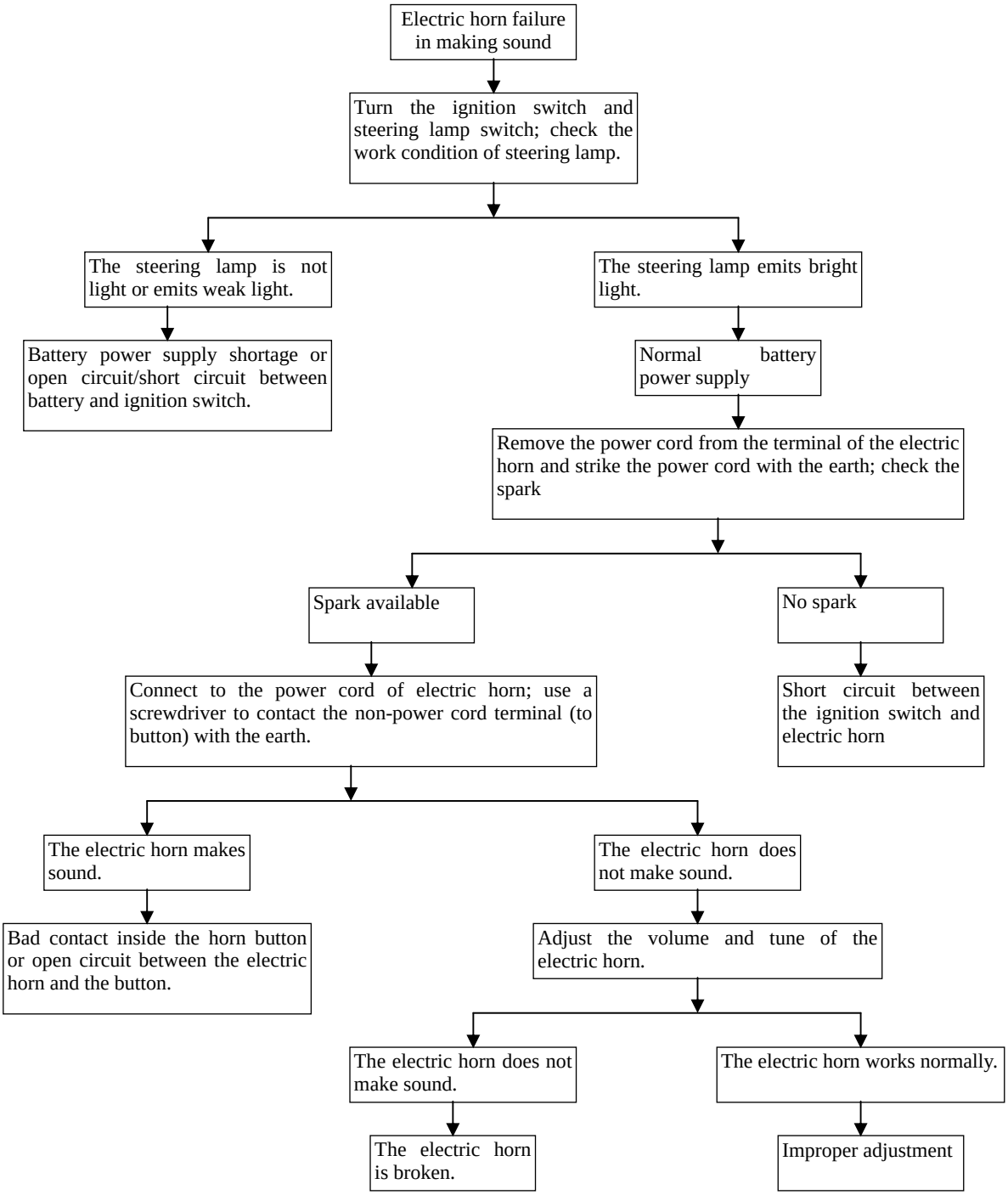

Diagnosis on brake lamp failure in illumination

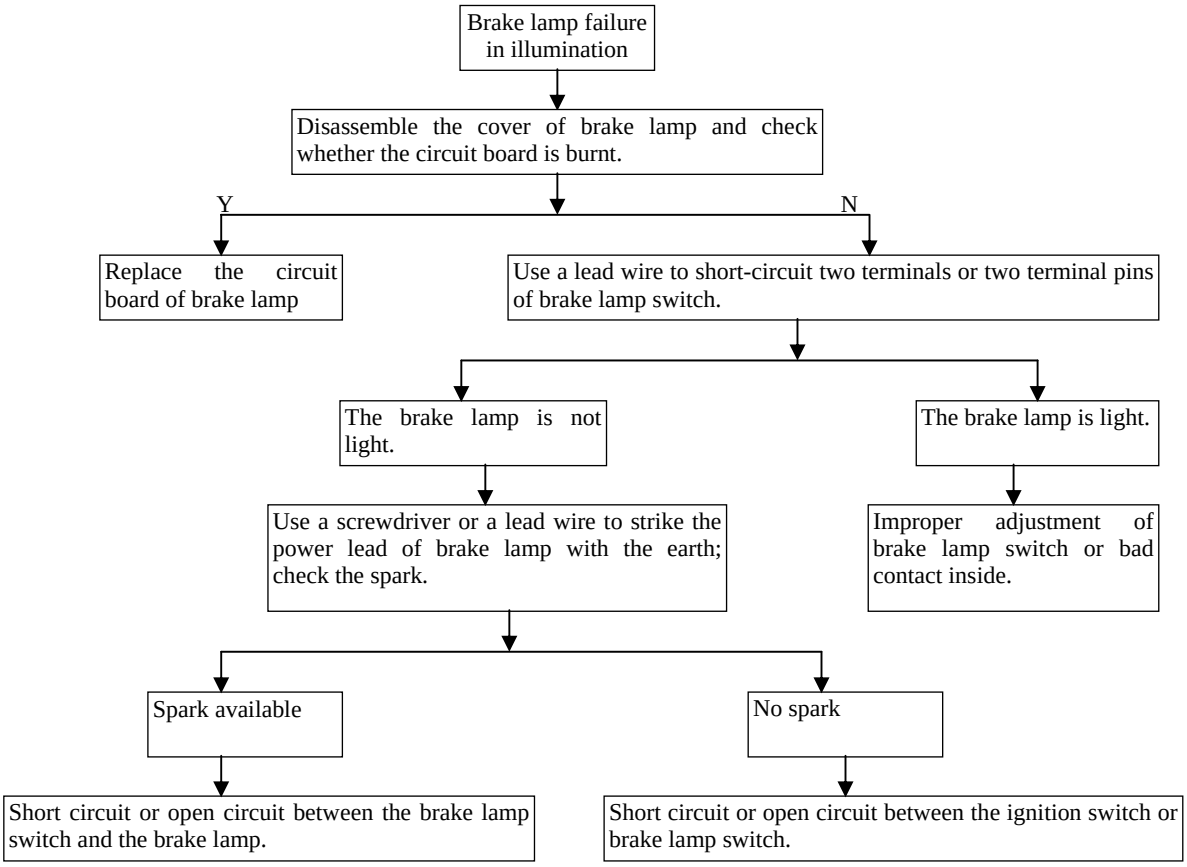

Diagnosis on power shortage of battery

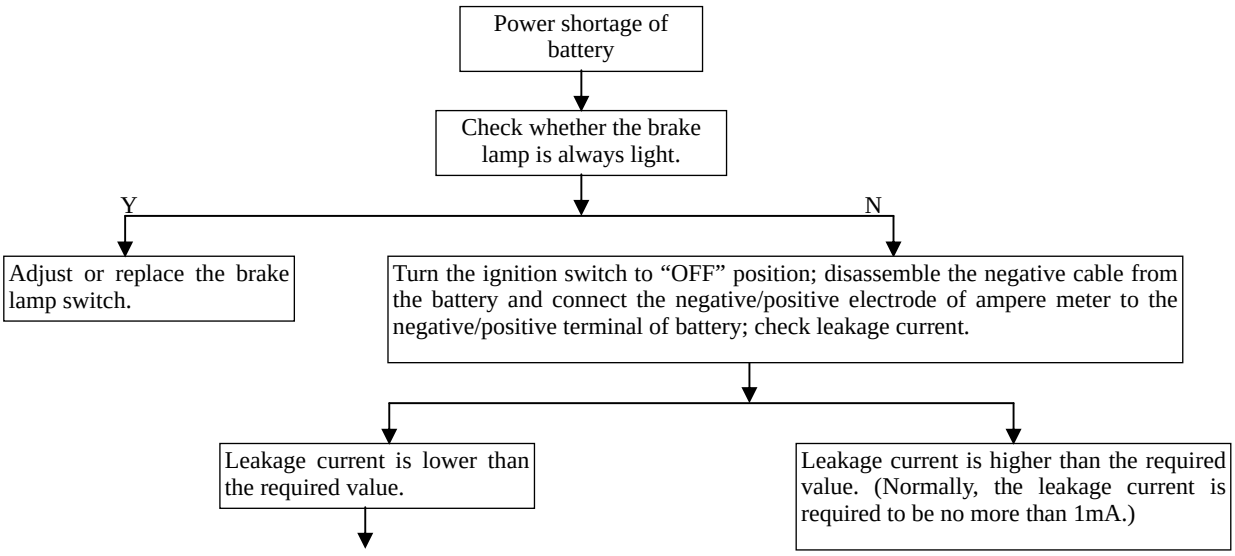

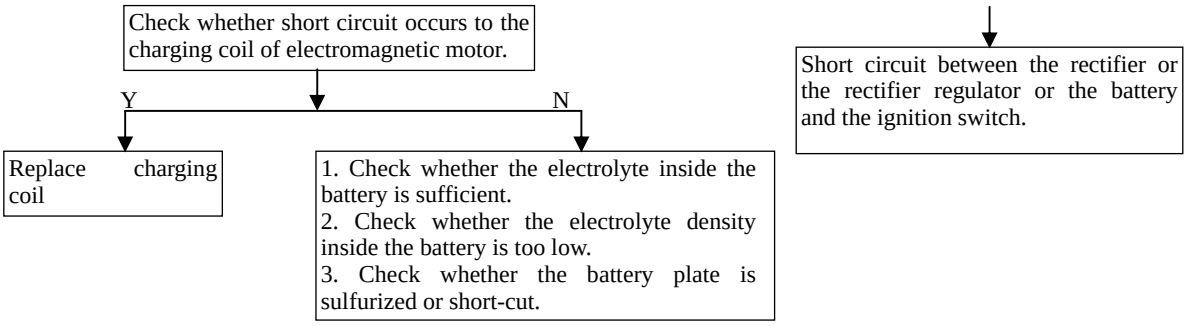
Check whether short circuit occurs to the charging coil of electromagnetic motor.
Y
N
Replace charging coil
1. Check whether the electrolyte inside the battery is sufficient.
2. Check whether the electrolyte density inside the battery is too low.
3. Check whether the battery plate is sulfurized or short-cut.
Short circuit between the rectifier or the rectifier regulator or the battery and the ignition switch.

Inspection/Adjustment

Preparing information Cylinder pressure

Periodic Maintenance & Inspection Table Gear oil

Engine oil/ Oil filter Replacement of gear oil

Fixing steering stem bearing & handlebar Driving belt

Inspection & adjustment of throttle cable Free stroke of front/rear brake

Air filter Inspection of brake fluid level

Spark plug Headlamp

Battery Clutch

Carburetor Front/rear suspension system

Ignition timing Bolt/nut/fastener

Rim/tire Tire specification

Preparing principles

General

Warning !

• Make sure that it is well ventilated before starting the engine. It is forbidden to start it in a closed area. Exhaust gas, which contains monoxide, may cause unconsciousness or even death of human being.

• Petrol is liable to volatile or explode under certain condition. Ventilation is required and no any fire exists in working places. Fire is strictly forbidden in working areas or where oil is stored.

Do not remove the battery during commissioning. Otherwise, it may cause damage to inner parts of the vehicle.

Specification

Engine

Idle speed	1800±100rpm/min
Spark plug gap	0.6-0.7mm
Spec. of spark plug	NGK CR6SHA

Frame

<table>
<tr><td colspan="2">Free stroke of front brake lever</td><td colspan="4">10-20mm</td></tr>
<tr><td colspan="2">Free stroke of rear brake lever</td><td colspan="4">10-20mm</td></tr>
<tr><td colspan="2" rowspan="5">Tire pressure unit: Kpa</td><td colspan="3">Specification</td><td>Tire pressure</td></tr>
<tr><td rowspan="4">FACT 50 4T</td><td>Front outer tire</td><td>120/70-12</td><td rowspan="2">145-170kpa</td></tr>
<tr><td>Front rim</td><td>3.50×12</td></tr>
<tr><td>Rear outer typre</td><td>130/70-12</td><td rowspan="2">170-195kpa</td></tr>
<tr><td>Rear rim</td><td>3.50×12</td></tr>
<tr><td rowspan="2">Torque value</td><td>Locking nut for front wheel spindle</td><td colspan="4">55-62 N·m</td></tr>
<tr><td>Fixing nut for rear wheel</td><td colspan="4">100-113 N·m</td></tr>
</table>

Certification for Related Parts

Type	Name	Certificate No.	Remark
Tire	Front outer tire	E11 75R 000210	
	Rear outer tire	E11 75R 000216	
Lamps	Headlamp	E3 00 1006	
	Tail lamp	E_{11} 50R-000054	
	Front steering lamp	E_3 50R-001024	Oval
	Rear steering lamp	E_3 50R-001024	Oval
	Front position lamp	E3 50 R001023	
Rear-view mirror	Rear-view mirror	E_3 001002	Black
Horn	Horn	E4 000066	Model DL 127
Reflector	Side reflector	E11 020614	Yellow
	Rear reflector	E11 020613	Red

Periodic Maintenance & Inspection Table

	Service cycle and time Inspection item	Per 300 KM	Per 1000 KM	Per 3000 KM	Per 6000 KM	Per 12000 KM	Per 14500 KM	Tools
		New	One month	Three months	Six months	Twelve months	Fifteen months	
*	Air filter	I		C	C	R	C	Ordinary tools
*	Petrol filter	I			I	R		Ordinary tools
*	Fuel filter	C			C	C		Ordinary tools
	Replacement of engine fuel	R	Replacement every 1000KM					Ordinary tools
	Tire pressure	I	I	I	I	I	I	Tire pressure gauge, inflator
	Battery inspection	I	I	I	I	I	I	Densimeter, multimeter
	Actuation gap inspection	I	I	I	I	I	I	Ordinary tools
	Inspection of steering handle fastening	I			I	I		Ordinary tools
	Absorber working inspection	I			I	I		Ordinary tools
	Screw fastening inspection	I	I	I	I	I	I	Torque spanner
	Oil leakage inspection for gearbox	I	I	I	I	I	I	Ordinary tools
*	Inspection or replacement of spark plug	I		I	R	R	I	Ordinary tools
*	Replacement of gearbox oil	I	Replacement every 5000KM					Ordinary tools
	Lubrication of each part				L	L		Lubricator
	Muffler	I	I	I	I	I	I	Ordinary tools
*	Ignition timing	I	I	I	I	I	I	Timing lamp
*	Carburetor	A	I	A	A	A	A	Tachometer, CO HC analyzer
*	Exhaust gas inspection at idle speed	A	I	A	A	A	A	
*	Throttle inspection	I		I	I	I	I	Ordinary tools
	Fuel pipeline inspection	I		I	I	I	I	Ordinary tools
	Lighting/metering/electric devices	I	I	I	I	I	I	Visual multimeter
	Main stand bracket	I			I	I		Ordinary tools
	Absorber			I	I	I	I	Ordinary tools
*	Torque force of engine bolts	I		I	I	I	I	Torque spanner

Anticipated Inspection

1	Ignition system—obviously continuous ignition abnormality, engine fire or overheating, which requires inspection and maintenance.
2	Carbon fouling elimination—obviously insufficient horsepower, which requires carbon fouling removal from cylinder head, piston head and exhaust system.
3	Piston & cylinder—excessive abrasion; replace cylinder if it is blocked.

Please have your motorcycle inspected and adjusted periodically at Qianjiang distributors for being in best condition.

The above table is established under the presupposition of 1000 km/month.

I—Inspection A—Adjustment R—Replacement C—Cleaning L—Lubrication

Note: 1. "*" Regulations on exhaust emission made by the State Environmental Protection Agency shall be complied with. Maintenance must be carried out in accordance with the instruction manual supplied by the company. We are not responsible for any loss rising from private adjustment or maintenance.

2. Increase frequency of washing air filter if your motorcycle runs on the sandy/gravel road or under heavily polluted environment so as to extend its service life.

3. Motorcycles which often run at high speed or with high mileage shall be maintained frequently.

Engine oil/filter

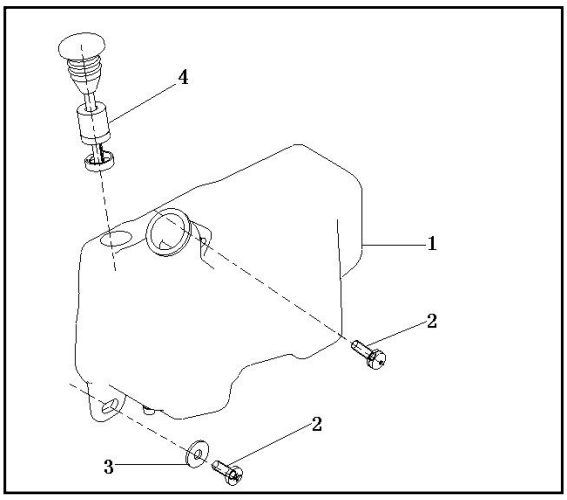

Oil level

*** Note**

• The motorcycle should be parked on a flat ground when checking its oil level.

• After the engine runs for 2-3 minutes or stops running for about 2-3 minutes, check the oil level.

Check the oil level.

Add oil to the upper limit when there is an alarm from the oil level sensor.

Oil replacement

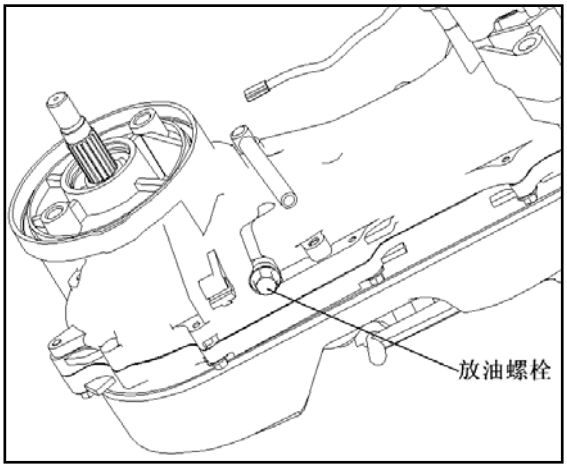

*** Note**

It will be easier to change oil when the engine is warming up.

Turn off the engine.

Remove the drain bolt at the bottom of the crankcase and discharge oil.

When oil is discharged completely, you can install the drain bolt and packing washer after they are cleaned.

Add oil to the required level.

Check oil leakage when the engine operates at its idle speed for minutes.
Check the oil level again. （放油螺栓：drain bolt）

Throttle cable inspection/adjustment

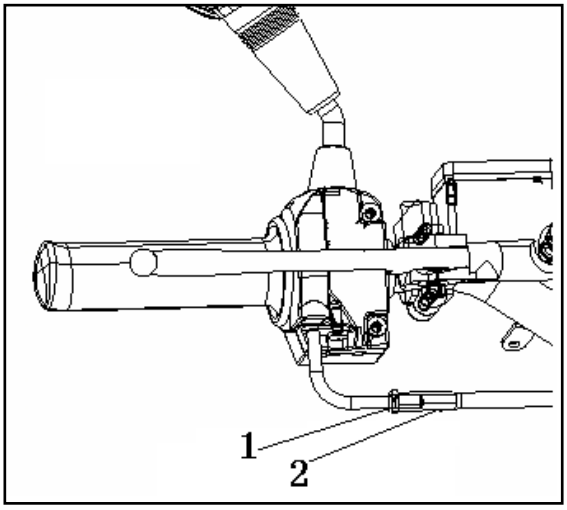

Check whether the throttle cable works smoothly.
Check the free stroke of the throttle cable.
Free stroke: 5-10mm

It is mainly adjusted at the carburetor side.
Loosen the fixing nut and then rotate the adjusting nut for adjustment.

Air filter

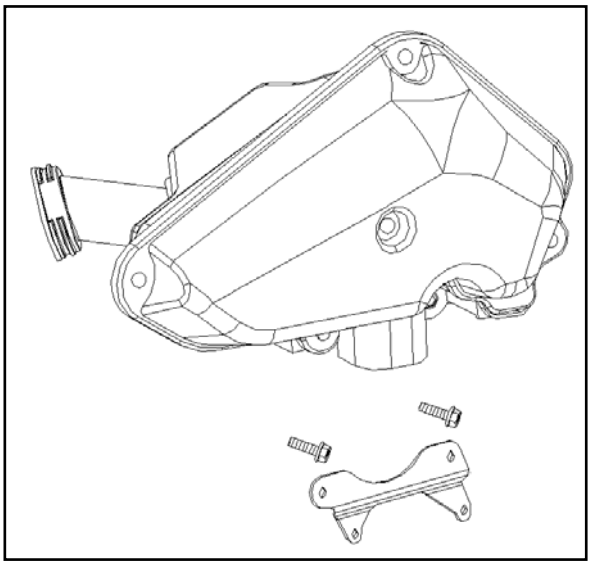

Filter replacement.
Remove the body guard.
Remove the fixing screws of air filter.
Remove the top cap of air filter.
Remove the cartridge from the filter.

Check whether the cartridge is stained or damaged.
Replace it if necessary.
Remove the clamp assembly.
Remove the filter.
Check whether the filter is stained or damaged.
Replace it if necessary.

Replacement time

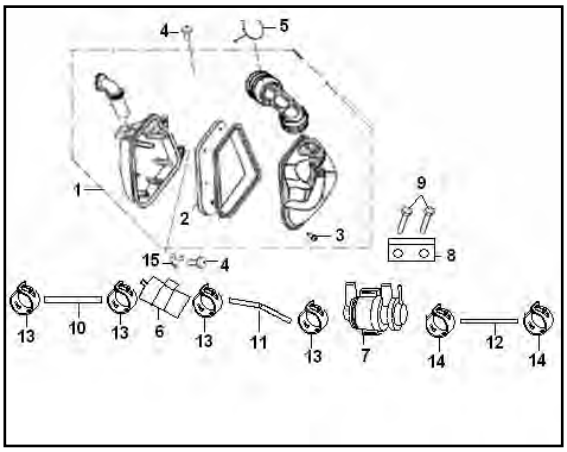

Replace it as early as possible if the motorcycle is always running on rainy days or on rugged road.

*** Note**

• Make sure the air filter cap is well installed before installing

the filter.

Spark plug

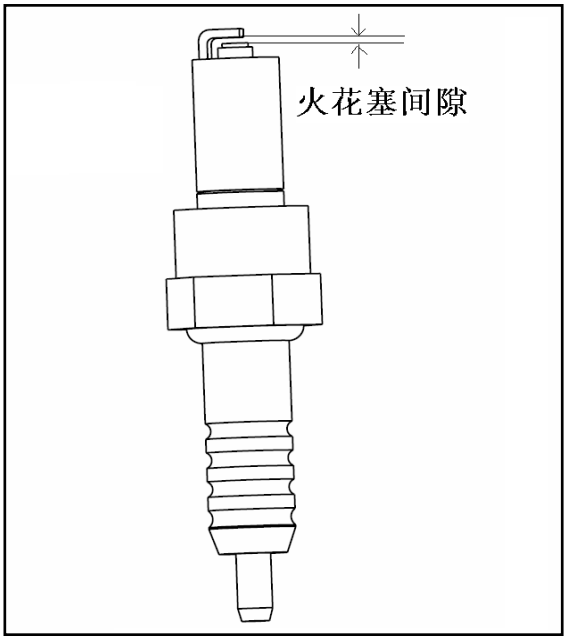

Remove the spark plug.
Check whether the spark plug is damaged or stained or has carbon fouling.
If yes, please clean it with spark plug cleaner or steel brush.

Check spark plug gap.

Gap: 0.6-0.8mm

（火花塞间隙：spark plug gap）

*** Note**
For the installation of spark plug, it shall be installed with hand first and then fastened with spark plug sleeve.

Battery

Battery disassembly

Remove the fixing screws of the battery box cover.
Remove the battery box cover.
Remove the negative wire and then the positive wire.
Remove the battery.

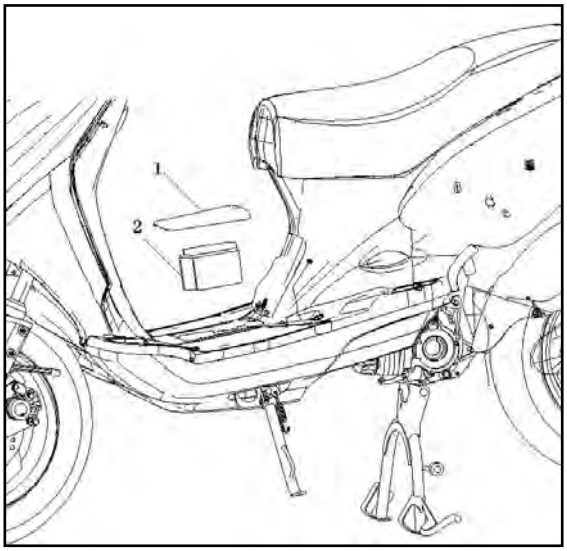

Warning!
When the positive wire is disassembled, do not make the tool contact with the frame. Otherwise, it may cause short-circuit spark, which may ignite gasoline and damage the battery. It is dangerous.

Install it in reverse order.

Warning!

To prevent short circuit, connect the positive wire first and then the negative wire.

Do not remove the battery during commissioning. Otherwise, it may cause damage to inner parts of the vehicle.

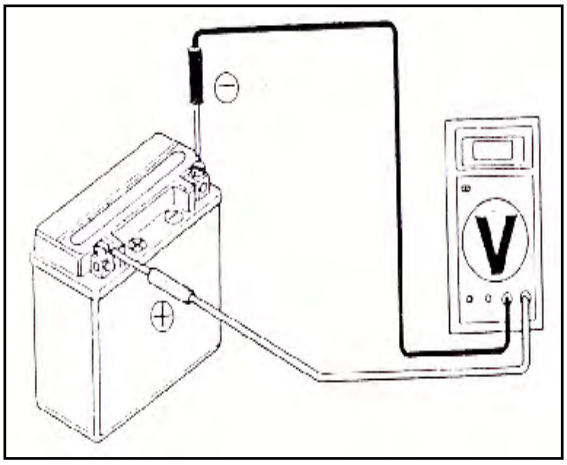

Check the charging condition (closed circuit voltage)

Open the battery box cover.

Remove the negative wire and then the positive wire.

Remove the battery.

Measure voltage between battery terminals.

Fully charged: 13.1V

Insufficient charging: 12.3V

*** Note**

Use a voltmeter to check the charging condition.

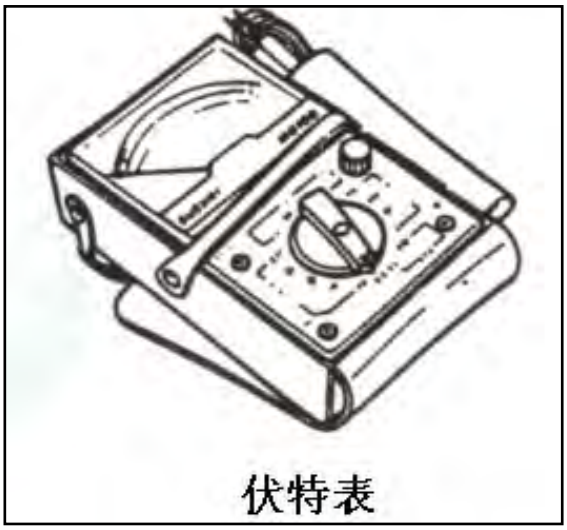

Charging

Connection: the positive pole of the charger to the positive pole of the battery.

The negative pole of the charger to the negative pole of the battery.

（伏特表：voltmeter）

Warning!

• The battery should be far away from fire source.

• Turn off the charger before or after charging to avoid explosive danger caused by spark which may exist in any connection.

• Comply with the current and time requirements for charging as stated on the battery.

*** Note**

• Except emergencies, you should not use emergency charging.

• Measure voltage in 30 minutes after the battery is charged.

Charging current: standard:0.4A

quick: 4.0A

Charging time: standard: 10-15 hours

quick: 30 minutes

Charging completed: open circuit voltage: above 12.8V

Carburetor

Idle speed adjustment

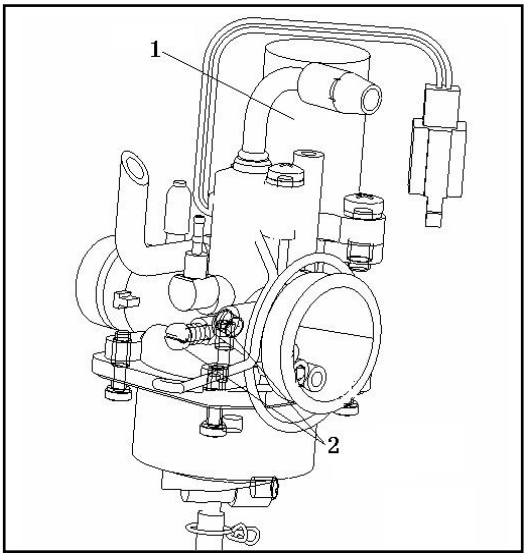

* **Note**

Idle speed adjustment is carried out when the engines warms up.

It is carried out when the engines warms up.

Operate the engine and connect the engine rotary meter.

Adjust the adjusting screws of the throttle cable.

Idle speed: 1800±100rpm/min

When it rotates unstably at idle speed or it is unsmooth during oil filling slightly, adjust the idle speed adjusting screw.

Ignition timing

*** Note**

Check the ignition system when the ignition timing is incorrect.

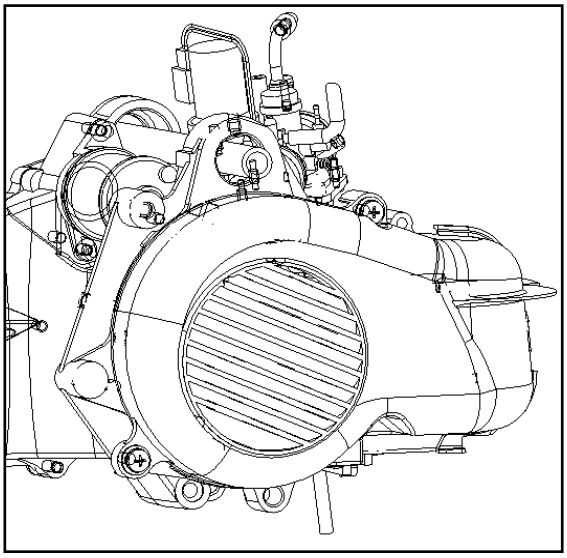

Remove the fixing bolt.

Remove the guard.

Use an ignition timing lamp to check ignition timing.

Cylinder pressure

Operate it when the engine warms up.

Remove the seat the body guard.

Remove the spark plug.
Install the cylinder pressure gauge.
At full throttle, measure the cylinder pressure by starting the engine.

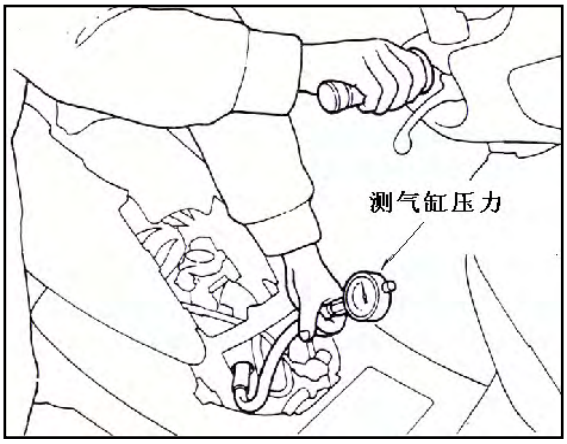

Following items shall be checked in case of extra-low pressure:
—whether the spacer of cylinder cover is damaged;
—whether piston ring is damaged;
—whether piston ring is worn;
—whether the piston or the cylinder is worn. （测气缸压力：measure the cylinder pressure）
When compression pressure is too high, please check whether there is too much carbon fouling inside the combustion chamber and at piston head.

Gear oil

Inspection

*** Note**
Set the middle kickstand on the flat ground and keep the motorcycle upright for checking the oil level.

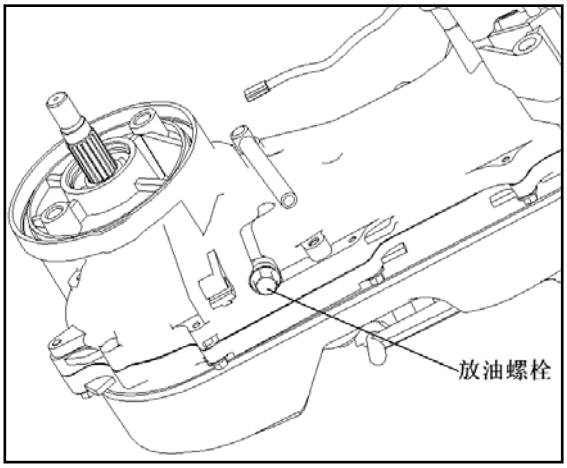

Disassemble the dipstick after the engine stops.
It is good if the oil level at the lower limit of the dipstick. （放油螺栓：drain bolt）
Add gear oil when the oil level is too low.
Install the dipstick.

*** Note**
Make sure whether the bolt is well sealed, slippery or damaged.

Gear oil replacement

Remove the dipstick.
Remove the drain bolt and gear oil is drained.
Install the drain bolt.

*** Note**
Make sure whether the bolt is well sealed, slippery or damaged.

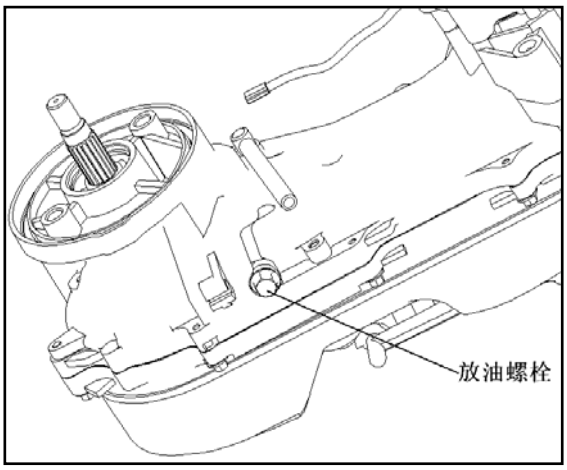

Add gear oil.
Check whether there is oil leakage in any part.
Install the dipstick.

（放油螺栓：drain bolt）

Drive belt

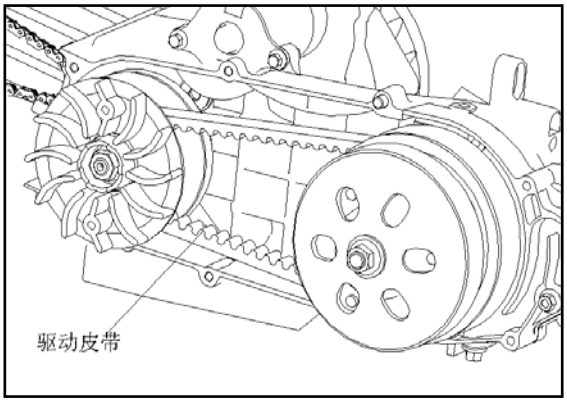

（驱动皮带：drive belt）

Remove the cover of left crankcase.
Check whether the drive belt is ruptured or abraded.
Periodically maintenance shall be guaranteed, and replace the drive belt if necessary.

Free stroke of front/rear brake

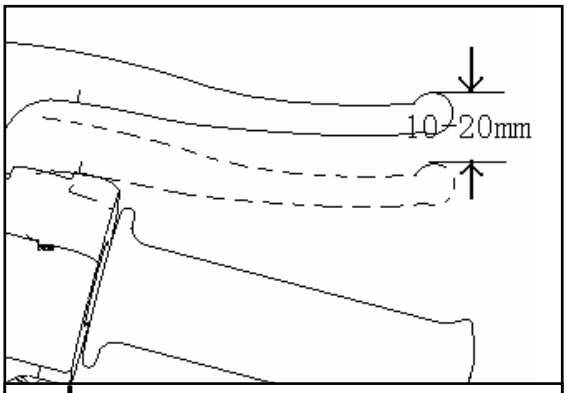

Free stroke of front brake

Measure the free stroke of front brake at the tip of the brake lever.
Free stroke: 10-20mm

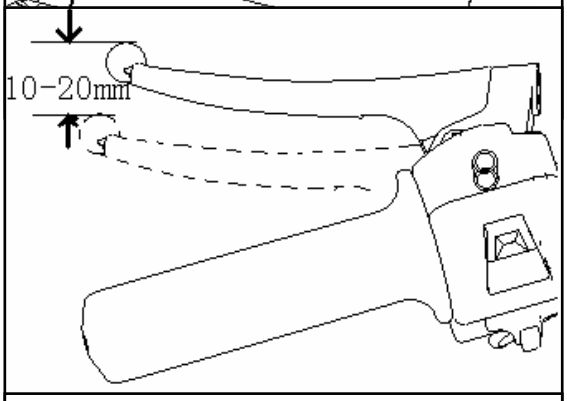

Free stroke of rear brake

Measure the free stroke of rear brake at the tip of the rear brake lever.

Free stroke: 10-20mm

Inspection of brake fluid level

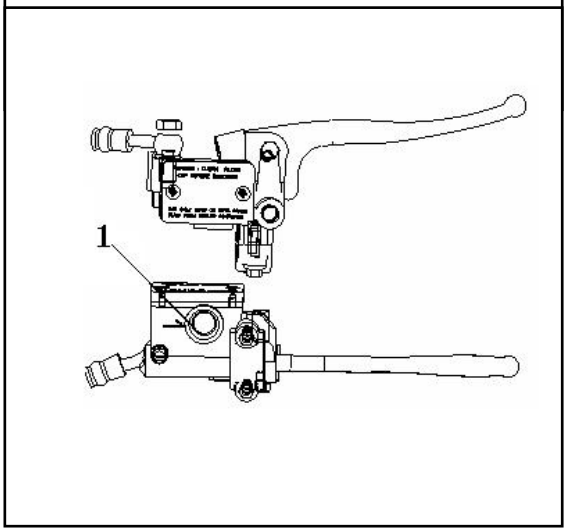

Brake to the maximum and check the oil level through the oil sight glass. In case the brake fluid level is at or below the arrow in the picture, certain brake fluid shall be added until it reaches the upper limit.

Note:
The fuel pump assembly shall be parallel with the ground during inspection.

Headlamp

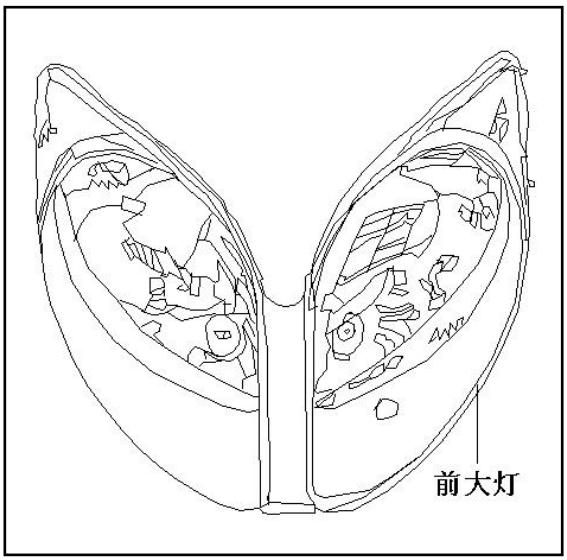

Remove the front shield.
Disconnect the connector of the headlamp.
Remove the headlamp.

(前大灯：headlamp)

Clutch

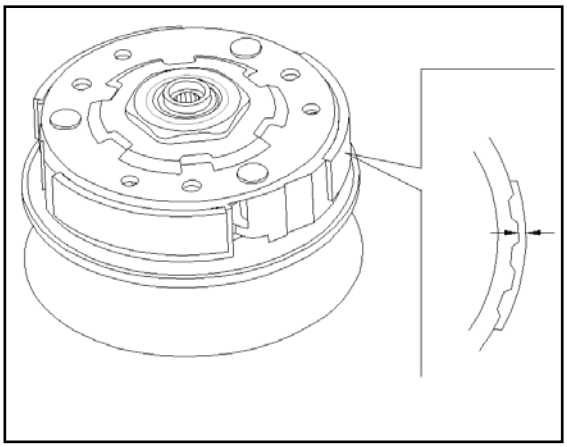

Start the engine and increase its speed gradually to check the work condition of the clutch. If the motorcycle fails to run or the engine flames out, you should check the clutch block. Replace it if necessary.

Front/rear suspension system

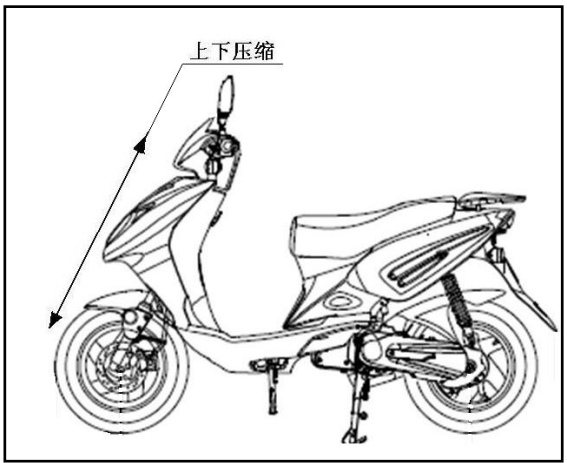

Front

Pull the front brake tight; compress the front absorber upwards or downwards for check.
Check whether there is oil leakage in the front absorber and

whether any component is damaged or loosened.

（上下压缩：compress upwards or downwards）

Rear

Compress the rear absorber upwards or downwards for check.
Check whether each part of the rear absorber is damaged or loosened.
Suspend the rear wheel and check shimmy.
Check whether the suspension bushing of the engine is loose or not.

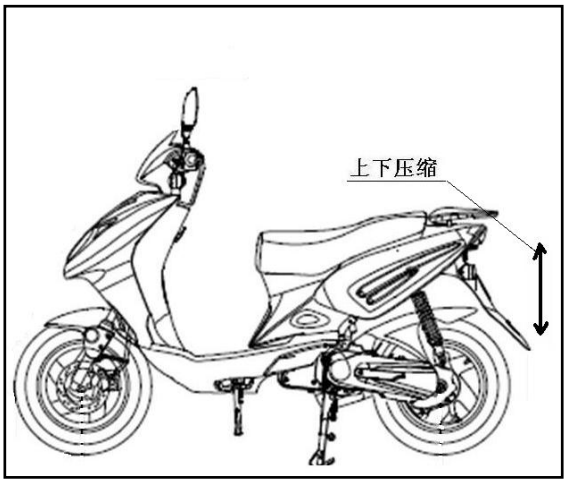

（上下压缩：compress upwards or downwards）

Bolt/nut/fastener

Check whether each bolt, nut and fastener is loose.
If yes, tighten it to required torque.

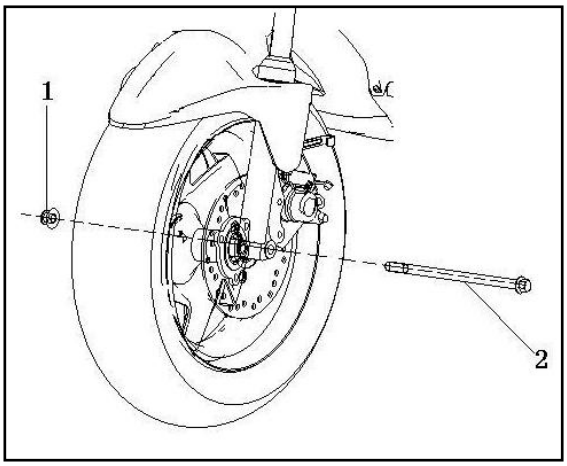

Rim/tire

Check whether tires or rims have any crack, nail or any other damage.
Check tire pressure.
***Note**
Check tire pressure when it is cold.

Required pressure Unit: Kpa

Specification			Tire pressure
FACT 50 4T	Front outer tire	120/70-12	145-170
	Front rim	3.50×12	
	Rear outer tire	130/70-12	170-195
	Rear rim	3.50×12	

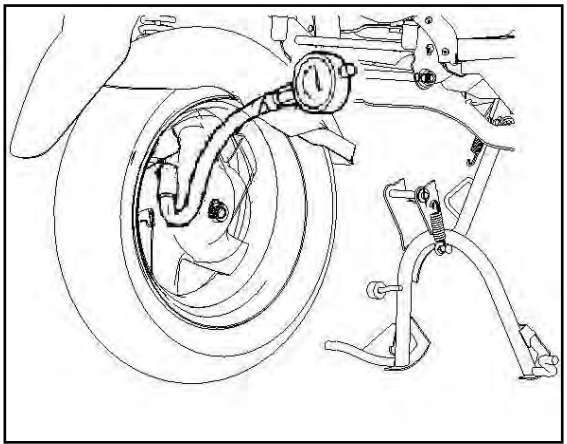

Tire specification

FACT 50 4T	Front outer tire	120/70-12
	Front rim	3.50×12
	Rear outer tire	130/70-12
	Rear rim	3.50×12

Check whether the locking nut of the front wheel spindle is loose.
Check whether the fixing nut of the rear wheel is loose.
Tighten it to the required torque value if it is loose.

Torque value: locking nut of the front wheel spindle 55-62 N·m
fixing nut of the rear wheel 100-113 N·m

Fixing steering stem bearing and handlebar

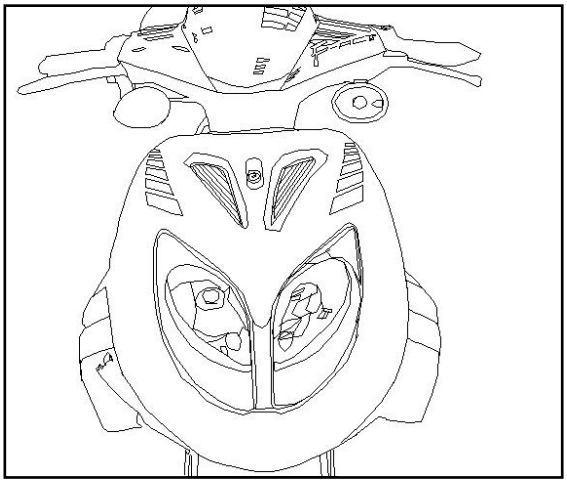

Move the handlebar to confirm there is no wire interference.
Rotate the front wheel and move the handlebar freely for check.
If the handlebar moves difficultly, release it and then check the bearing of the fixing steering stem.

Inspection and Maintenance of Electrical System

Table of Torque Force of Electrical System Fasteners

Name of fastening parts and fasteners	Tightening torque（N·m）
Clutch cover bolt of the startup motor	12
Clutch fixing nut of the startup motor	95
Rectifier bolt	5.0
High-voltage coil fixing bolt	9.0
Flywheel fixing nut	5.0
Body guard bolt	9.0

Charging system

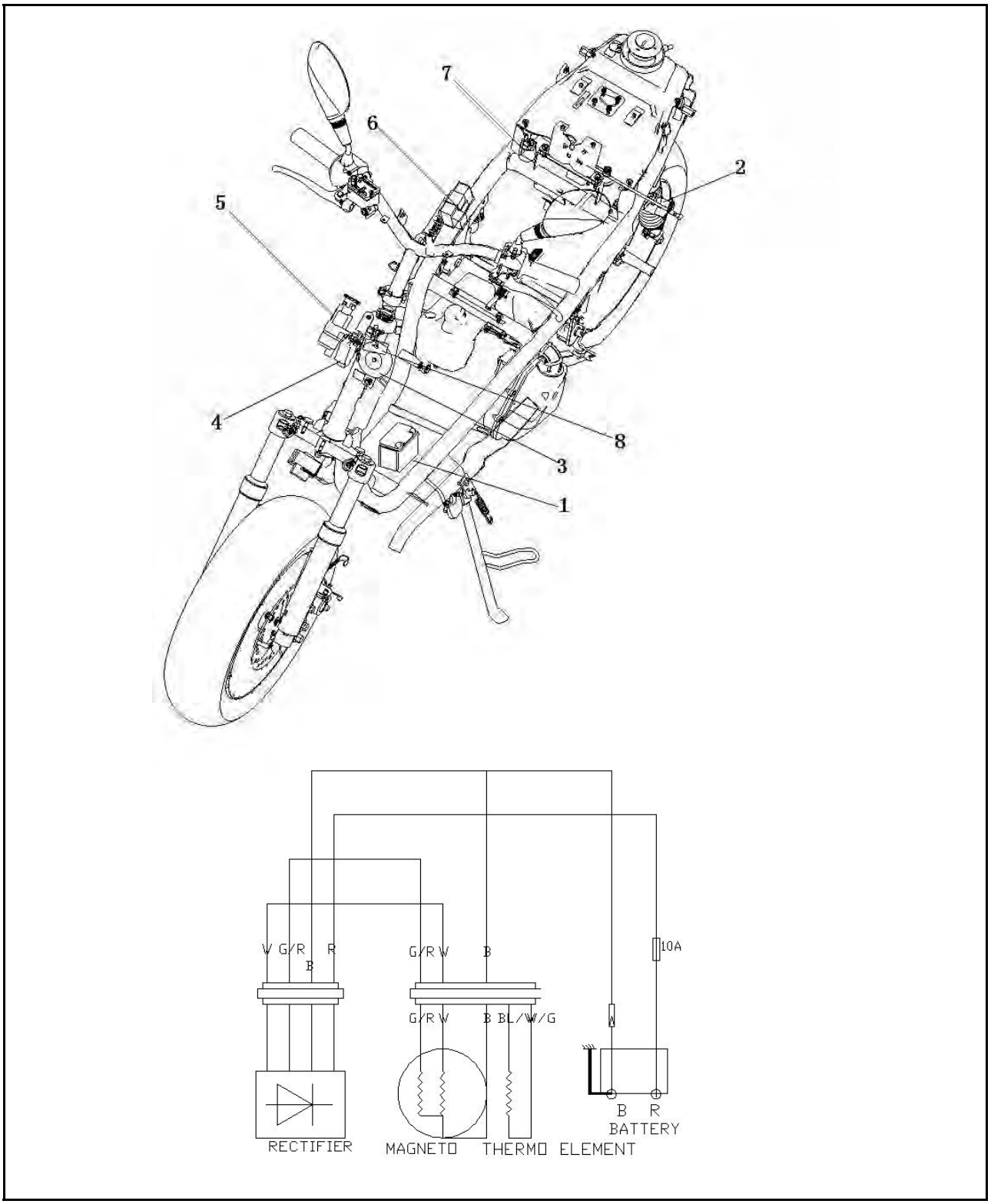

1. Battery 12V，4AH 2. Seat lock assembly 3. Horn 4. Rectifier 5. Power lock assembly 6. CDI igniter 7. Relay 8. Release resistance

1. Battery/Charging System

1.1 Preparing documents

Work Instructions

***Note**

1. Battery can be charged or discharged repeatedly. If it is placed after discharge, its service life will be shortened and performance is undermined. Normally, the battery performance will be degraded after two or three years. For battery with performance degradation (reduced capacity), voltage will recover temporarily after charging but decrease sharply when loading.
2. Battery overcharge: normally, overcharge can be judged upon the battery. In the case of short circuit inside the battery, its terminal is unable to detect voltage or the detected voltage is very low. Regulator failure: overvoltage inside the battery will shorten its service life.
3. The battery will be self-discharged if being stored for a long time, which reduces its capacity. It shall be charged about every three months.
4. Check the charging system following the sequence listed on the failure diagnosis table.
5. Do not remove the connector when there is current through electrical parts, otherwise it will cause overvoltage and damage to electrical parts inside the voltage regulator. Please operate it after the main switch turns off.
6. It is unnecessary to check the maintenance-free battery and add electrolyte and distilled water.
7. Check all the electric load.
8. Emergency charging can only be used under emergency situation.
9. Remove the battery from the motorcycle for emergency charging.
10. Do not use electrolyte-added batteries when interchanging batteries.
11. Use a voltmeter to check charging condition of the battery.
12. Do not remove the battery during commissioning. Otherwise, it may cause damage to inner parts of the vehicle.

Preparing principles

Item			Specifications
Battery	Capacity/Type		12V-4AH/ dry-charged
	Voltage（20 ）	Fully charged	13.1V
		Necessary charging	12.3V(not working for 1h)
	Charging current		Standard: 0.4A，quick: 4A
	Charging time		Standard: 10-15 hours，quick: 30 mins
Magnetor	Capacity		90W/8000rpm
	Impedance of lighting coil（20 ）		Between green/red-black 2.0-2.5Ω
	Impedance of charging coil（20 ）		Between white-black 1.5-2.0Ω
Voltage regulator	Type		Single-phase semiwave SCR charging SCR semiwave short-circuit
	Limited voltage	Lighting limit	14.0V±0.4V/5000rpm
			13.5V/5000rpm
		Charging limit	14.8V±0.4V/5000rpm

Tightening torque force　　Tools

Rectifier bolt　5.0 N·m　Universal fixing spanner

High-voltage coil fixing bolt　9.0 N·m　Flywheel remover

Flywheel fixing nut　5.0 N·m　Test instrument

Body guard bolt　9.0 N·m　Multimeter

1.2 Failure diagnosis

Power supply dead　　Interrupted current

Battery overdischarge　　Poor contact of the charging wire

Unconnected battery wiring　　Poor contact of the charging system

Fuse blow　　Poor contact or short circuit of the lighting system

Poor switch

Low voltage　　Poor charging system

Poor battery charging　　Poor contact, short circuit or open circuit of wire terminals

Poor contact　　Poor voltage/current regulator

Poor charging system　　Poor magnetor

Poor voltage/current regulator

1.3 Battery

1.3.1 Battery disassembly

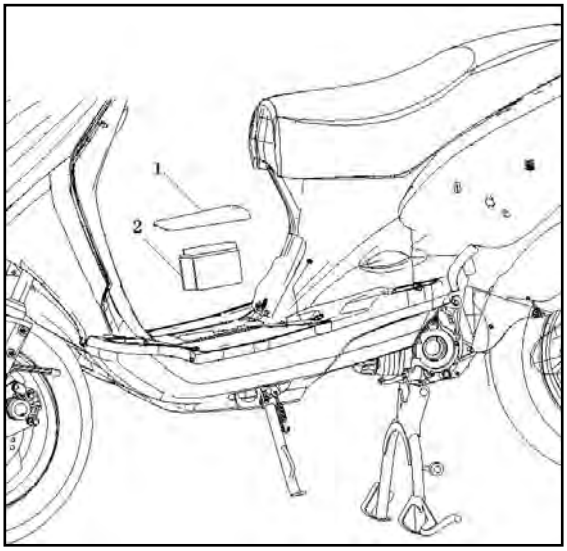

Remove fixing screws of the battery box cover.
Remove the battery box cover.
Remove the negative wire and then the positive wire.
Remove the battery.

Warning!
When the positive wire is disassembled, do not make the tool contact with the frame. Otherwise, it may cause short-circuit spark, which may ignite gasoline and damage the battery. It is dangerous.
Install it in reverse order.

*** Note**
To prevent short circuit, connect the positive wire first and then the negative wire.
Do not remove the battery during commissioning. Otherwise, it may cause damage to inner parts of the vehicle.

Check the charging condition (closed circuit voltage).
Open the battery cover and remove the battery plate assembly.
Remove cables to the battery connectors.

Measure voltage between battery terminals.
Fully charged: 13.1V
Insufficient charging: 12.3V (not working for 1 hour)

*** Note**
Use a voltmeter to check the charging condition.

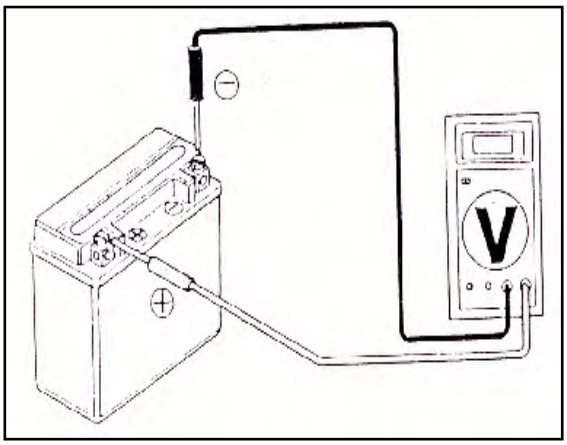

1.3.2 Charging

Connection method: connect the positive terminal of the charger with the positive terminal of the battery;
connect the negative terminal of the charger with the negative terminal of the battery.

Warning!
• The battery should be far away from fire source.
• Turn off the charger before or after charging to avoid explosive danger caused by spark which may exist in any connection.
• Comply with the current and time requirements for charging as stated on the battery.

*** Note**

• Except emergencies, you should not use emergency charging.
• Measure voltage in 30 minutes after the battery is charged.

Charging current: standard: 0.4A
quick: 4.0A
Charging time: standard: 10-15 hours
quick: 30 minutes
Charging completed: open circuit voltage: above 12.8V

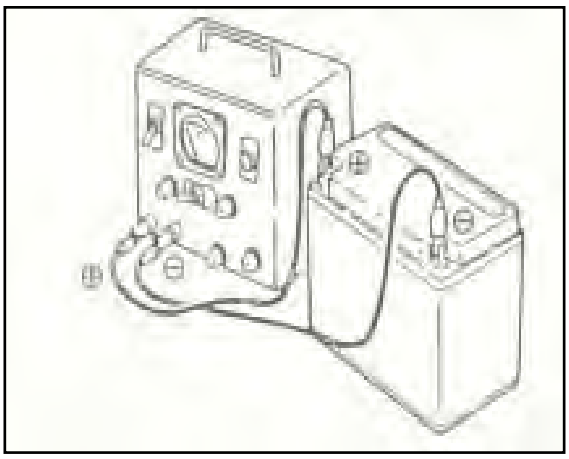

1.4 Charging system

1.4.1 Short-circuit test

Remove the earth lead from the battery. Install a voltmeter between the negative terminal and the earth lead. Turn off the switch. Check short-circuit.

*** Note**
Connect the positive terminal of the multimeter with the negative terminal of the battery.

Check whether there is short-circuit in the main switch or in the main wire in the case of any abnormality.

1.4.2 Charging check

Use a multimeter to check the charging status of the battery when it is being fully charged.
Install the fully charged battery after the engine warms up.
Connect a voltmeter between terminals.
Remove the main fuse and connect an ammeter between terminals.
Start the engine and increase its speed gradually to measure the limiting voltage and current.

Limiting voltage/speed: 14-15V （2500rpm） （万用电表：multimeter）

Check the voltage regulator if the limiting voltage is not within its required range.
Check the limiting voltage of the lighting system.

*** Note**
Set the multimeter to the AC voltage position.

Limiting voltage: 13.1±0.5V/2500rpm
Check the voltage/current regulator if the limiting voltage is not within its required range.

1.5 Voltage/current regulator

1.5.1 Main wiring check

Remove 4p plug of the voltage/current regulator.

Check conductivity between main wiring terminals.

Item (wire color)	Judgment
Between Battery(red) and GND of the body	With battery voltage
Between GND wire (black) and GND of the body	With lead
Between charging coil (white) and the GND of the body	Resistance in the coil of the magnetor.
Between lighting cable (green/red) and the GND of the body (resistor plug; automatic side starter plug; remove the lighting switch and check it at the “OFF” position)	Resistance in the coil of the magnetor.

Multimeter Positive / Negative	White（A）	Green/red（L）	Red（B）	Black（E）
	Unit：MΩ			
White（A）		0	6.5	19~21
Green/red（L）	1~10		24~25	19~23
Red（B）	10~50	0		19~21
Black（	5~15	0	0	

1.5.2 Voltage-current regulator check

When the main cable is inspected to be normal, check whether the plug of the voltage/current regulator is in good contact. Measure impedance between terminals of the voltage/current regulator.

*** Note**

• Do not touch any metal part of the test rod of the multimeter with your finger for check.

• Check with multimeter. Different multimeters show different impedance and different results.

Replace the voltage-current regulator when the impedance between terminals is abnormal.

1.6 Magnetor charging coil

*** Note**

Check the magnetor charging coil on the engine.

Check

Remove the 6p connector of the magnetor.
Measure impedance between the white coil of the magnetor and the body with multimeter.
Standard: 1.5-2Ω（20 ）
Replace the magnetor coil when the measured value exceeds the standard value.

1.7 Magnetor lighting coil

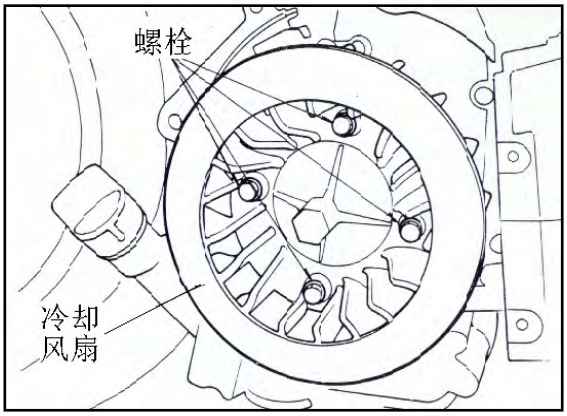

*** Note**
Check the magnetor lighting coil on the engine.

1.7.1 Check

Remove the 3p connector of the magnetor.
Measure impedance between the green/red coil of the magnetor and the body with multimeter.
Standard: 2.0-2.5Ω（20 ）
Replace the magnetor coil when the measured value exceeds the standard value.

（螺栓：bolt 冷却风扇：cooling fan）

1.7.2 Disassembly

Remove the body guard.

Remove the right body guard.
Remove the fixing bolts and screws; dismantle the fan cover.

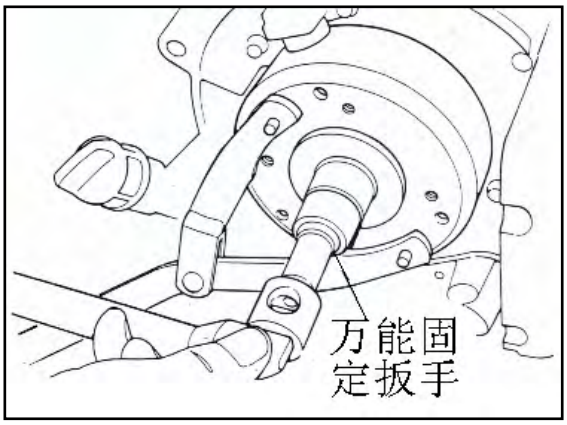

（万能固定板手：universal fixing spanner）

Remove four fixing bolts of the cooling fan; dismantle the cooling fan.

Fix the flywheel using the universal spanner.
Remove fixing bolts of the flywheel.
Remove the flywheel using the flywheel remover.
Remove the solid key.
Remove the conductor joint.
Remove the stator.

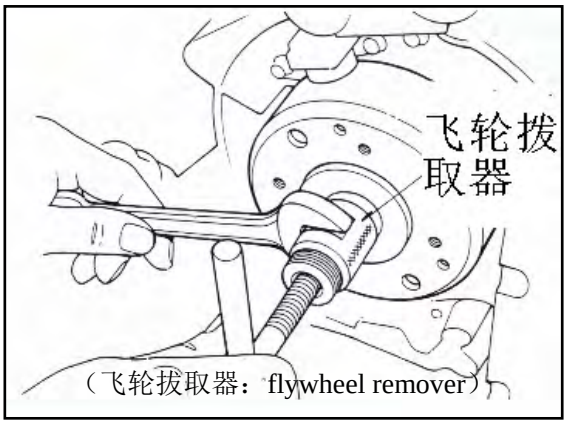

（飞轮拔取器：flywheel remover）

1.7.3 Installation

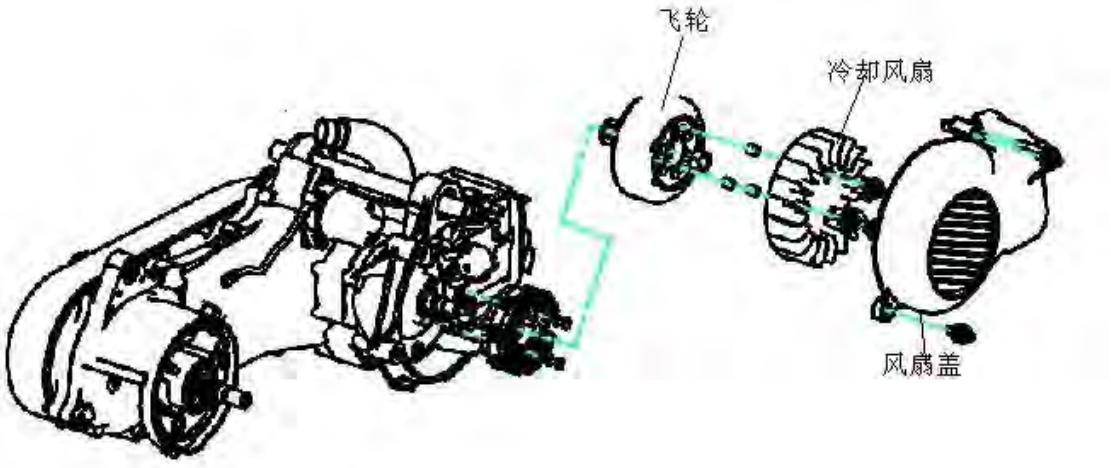

飞轮：flywheel　冷却风扇：cooling fan　风扇盖：fan cover

Install the stator on the body of the engine.
Connect the magnetor joint.

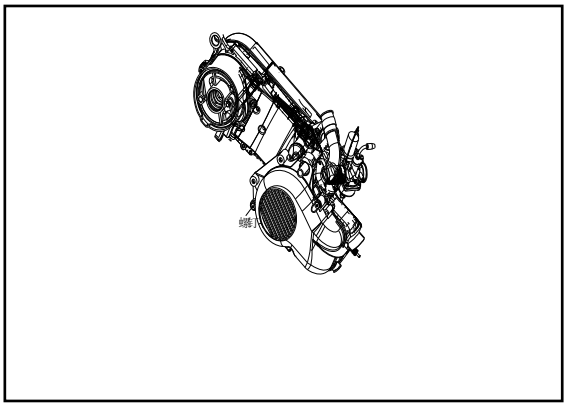

Clean up the crankshaft and the taper part of the flywheel.
Install the solid key into the groove above the upper crankshaft key and confirm it.
Aim the groove in the flywheel at the solid key on the shaft.

*** Note**
Ensure there is no any bolt in the inner magnetic side of the flywheel.

（螺钉：screw）

Fix the flywheel with the universal spanner and tighten fixing nuts.

Torque force: 9.0 N·m

Install the left body guard.

Ignition System

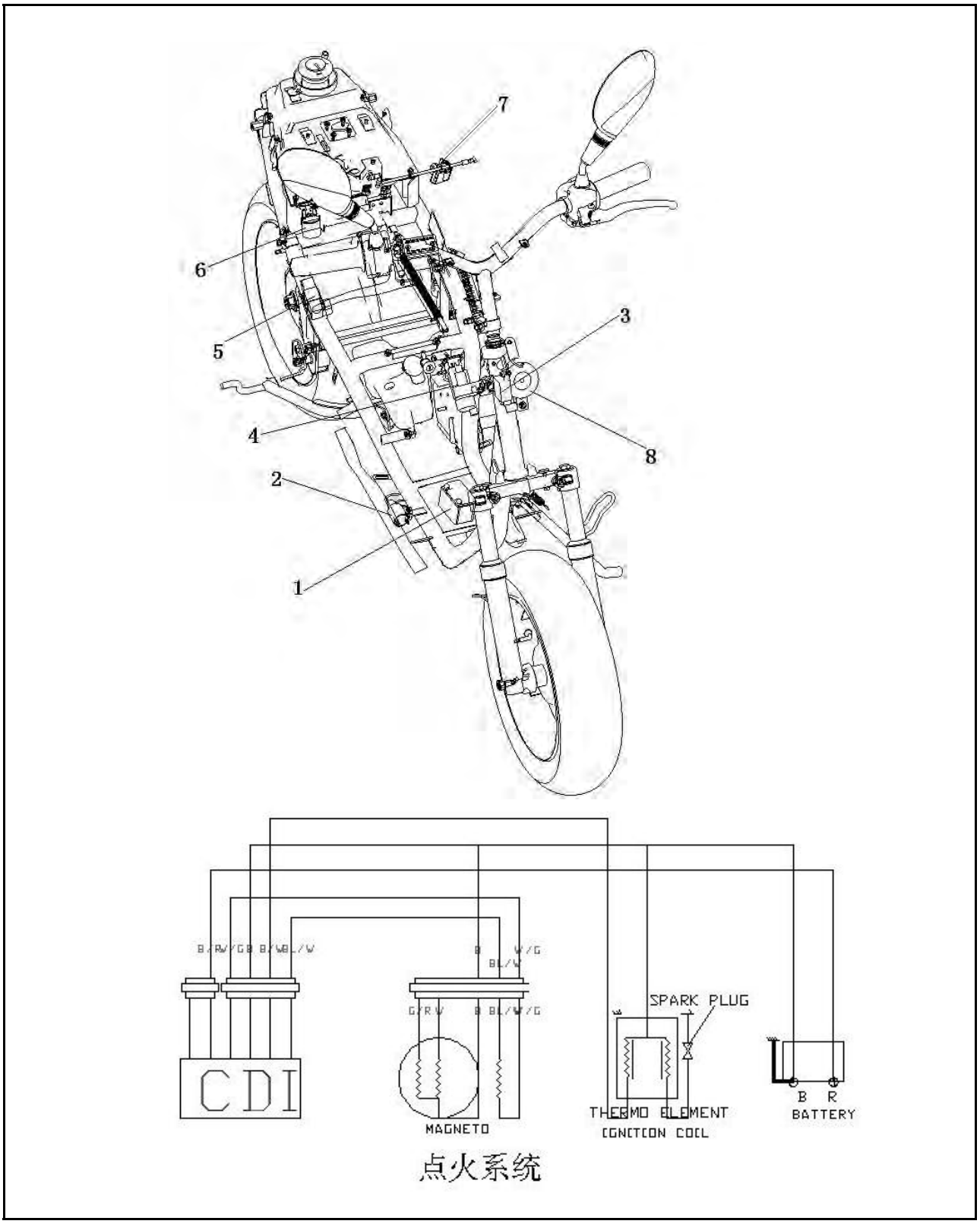

1. storage battery 12V，4AH 2. FBT assembly 3. rectifier 4. power lock assembly 5. CDI igniter 6. relay 7. seat lock assembly 8. horn 点火系统：Ignition System

2. Ignition System

2.1 Preparing documents

Work Instructions

1. Check the ignition system following the sequence listed in the table of failure diagnosis.
2. This ignition system is an electronically and automatically angling device. It is solidified in the CDI group and you don't have to adjust the ignition time.
3. Check the ignition system following the sequence listed in the table of failure diagnosis.
4. Do not make CDI of the ignition system fall down or hang down or hammer it with strong force (primary causes for failure). Pay special attention during disassembly.
5. Failure of the ignition system is mostly caused by poor contact of the socket. Check whether each connector is in good condition.
6. Check whether the heat value used for the spark plug is proper. If not, the engine may work abnormally or the spark plug may be burnt.
7. Check in this chapter is based on the maximum voltage. It also refers to check on the impedance of the ignition coil.
8. Check the main switch according to the conduction table.
9. Remove the magnetor and the stator according to instructions.

Preparing principles

Item			Standard value
Spark plug recommended	Standard		C5HSA(NGK)
	Hot type		C6HSA(NGK)
	Cold type		C7HSA(NGK)
Spark plug gap			0.6-0.7mm
Ignition coil impedance（20 ）	Primary coil		0.6Ω±10％
	Secondary coil	With plug cap	5-11KΩ
		Without plug cap	0.5-5.5KΩ
Impedance of trigger（20 ）			100-500Ω
Measure the maximum primary voltage of the ignition coil			95-400V
Trigger voltage			Above 1.7V
Charging coil voltage			95-400V

Tools

Attachments to the Maximum Voltage Table

Multimeter

2.2 Failure diagnosis

Non-sparking of spark plug

	Abnormality	Cause (confirm it sequentially as follows)
Ignition coil	Too low high-voltage	The inner resistance is too small and it should be tested by required tester. Low speed of the crankshaft. Interfered tester (It is normal that voltage is always beyond the required value upon several measurements.) Poor wiring contact of the ignition system. Poor ignition coil. Poor charging coil (measured at the maximum voltage).
Side voltage	No or interrupted high voltage	Incorrect connection of the tester. Poor main switch. Poor contact of CDI terminal. Short circuit or poor contact of the GND of CDI. Poor contact of charging coil (measured at the maximum voltage). Poor trigger (measured at the maximum voltage). Poor terminal of high-voltage wires. Poor CDI group (when item - is checked to be abnormal or there is no spark for spark plug.)
	Normal high voltage, but no spark	Poor spark plug or secondary leakage of the ignition coil. Poor ignition coil.
Charging coil	No high voltage	The inner resistance is too small and it should be tested by required tester. Low speed of the crankshaft. Interfered tester (It is normal that voltage is always beyond the required value upon several measurements.) Poor charging coil (Item - is checked to be normal.)
	No or interrupted high voltage	Poor ignition coil. Poor charging coil.
Trigger	Too low high-voltage	The inner resistance is too small and it should be tested by required tester. Low speed of the crankshaft. Interfered tester (It is normal that voltage is always beyond the required value upon several measurements.) Poor trigger (Item - is checked to be normal.)
	No or interrupted high voltage	Poor ignition coil. Poor trigger.

2.3 Ignition system check

*** Note**

• When there is no spark, check whether there is loose wiring or poor contact, and make sure all voltage values are normal.

• There are kinds of multimeters with different impedances and different test values.

Connect a high-pressure shunt or an ammeter with an input impedance above 10MΩ10CV to the multimeter.

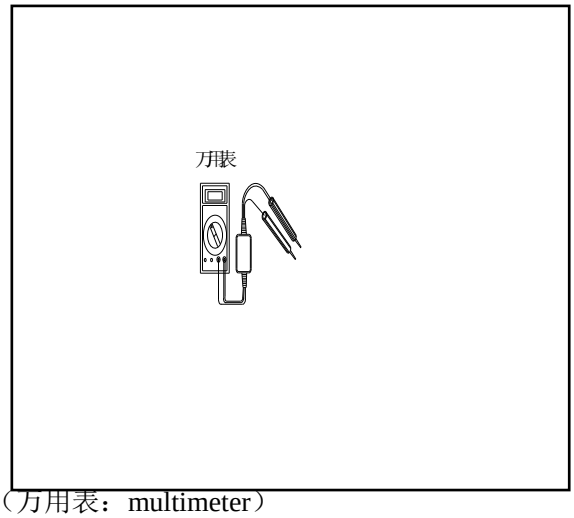

（万用表：multimeter）

2.3.1 Primary voltage of the ignition coil

If you replace the original spark plug with a better one, make ground connection with the engine.

*** Note**

Make sure all wiring is correct before test. Cylinder compression pressure normally refers to the test value when the spark plug is installed on the cylinder head.

Connect the lead of the ignition coil and also the shunt between the primary coil terminal (black/white) and the GND.

Press the startup motor or step the actuating lever to measure the maximum primary voltage of the ignition coil.

Minimum voltage: above 95V

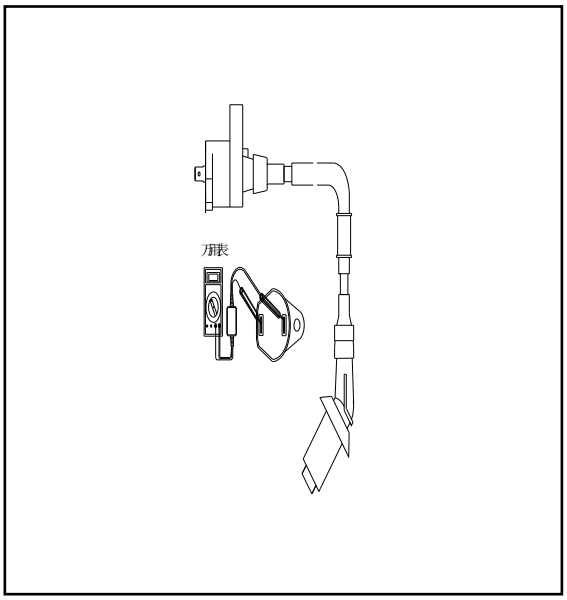

（万用表：multimeter 点火线圈：ignition coil）

*** Note**

Never touch any metal part of the test rod with your finger to avoid electric shock.

2.3.2 Charging coil

*** Note**

Install the spark plug on the cylinder head and carry out measurement when the compression pressure is normal.

Remove 4P and 2P connectors of CDI group. Connect the peak-voltage shunt between the charging coil (black/red) with 2P connector and the 4P connector (black terminal).

Press the startup motor or step the actuating lever to measure the maximum voltage of the charging coil.

Connection: positive pole to black/red; negative pole to black.

Minimum voltage: above 95V

*** Note**

Never touch any metal part of the test rod with your finger to avoid electric shock.

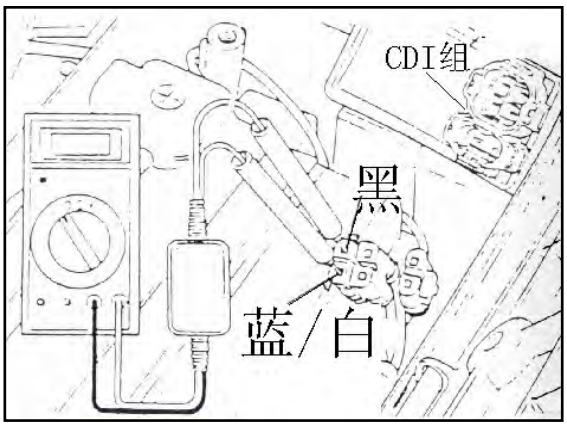

（CDI组：CDI group黑：black 蓝：blue 白：white）

When the maximum voltage measured at the terminal of CDI Group is abnormal, dismantle the body guard and the magnetor terminal.

Connect the charging coil (black/red) to the shunt.

• If the voltage of CDI is measured to be abnormal while the voltage at the magnetor terminal is normal, it is caused by poor contact or disconnected wiring.

• If the voltage at both CDI and magnetor terminal appears to be abnormal, it is caused by poor charging coil. Please refer to charging coil check.

2.3.3 Trigger

*** Note**

Install the spark plug on the cylinder head and carry out measurement when the compression pressure is normal.

Remove 4P and 2P connectors of CDI group. Connect the peak-voltage shunt between the trigger (blue/white) with 2P connector and the 4P connector (black terminal).

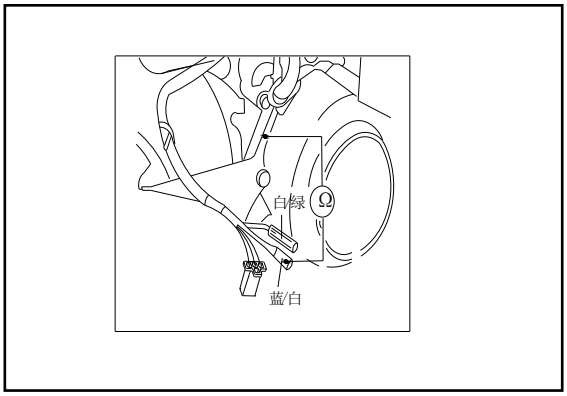

（白：white 蓝：blue 绿：green）

Press the startup motor or step the actuating lever to measure the maximum voltage of the trigger.

Connection: positive pole to blue/white; negative pole to green/white.

Minimum voltage: above 1.7V

*** Note**

Never touch any metal part of the test rod with your finger to avoid electric shock.

When the maximum voltage measured at the terminal of CDI Group is abnormal, dismantle the right body guard and the magnetor connector.

Connect the trigger (blue/white) to the shunt.

• If the voltage of CDI is measured to be abnormal while the voltage at the magnetor terminal is normal, it is caused by poor contact or disconnected wiring.

• If the voltage at both CDI and magnetor terminal appears to be abnormal, it is caused by poor trigger. Please refer to the table of failure diagnosis.

2.4 CDI Group

2.4.1 System check

Check the system.

Remove the CDI Group, and check components of the ignition system at the terminal.

（黑：black 红：red 白：white 绿：green 蓝：blue 墨绿：blackish green

2.4.2 Check

Remove CDI Group and check whether the terminal is loose or corrosive

Item	Test terminal	Standard (20)
Main switch	Red--red/white	Conduction when the main switch is “OFF”
Trigger	Blue/white – white/green	100-500Ω
Primary coil of the ignition coil	Black/white--black	0.6Ω±10％
Secondary coil of the ignition coil	Black--spark plug cap（excluding the spark plug）	0.5-5.5KΩ

2.5 Ignition coil

2.5.1 Disassembly

Remove the body guard.

Remove the spark plug cap.

Remove the primary lead of the ignition coil.

Remove the fixing bolts and then the ignition coil.

Install the ignition coil in reverse order.

*** Note**

Install the primary coil with black/white terminal.

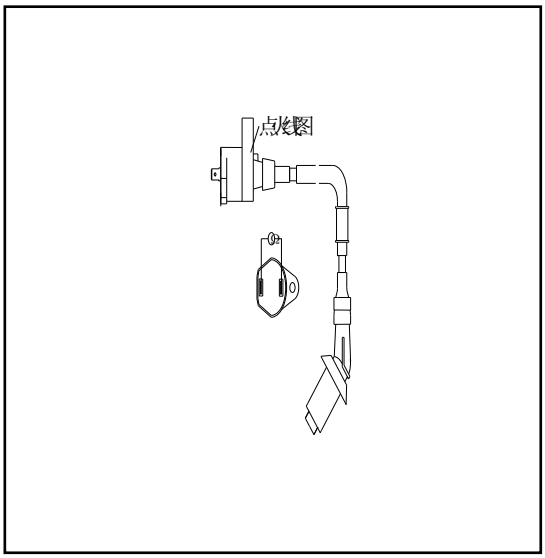

(点火线图：Ignition Coil Drawing)

2.5.2 Check the primary coil

Measure impedance between terminals of the primary coil.

Standard: 0.6Ω±10％（20 ）

It shows good if the impedance is within the range of standard values.

Replace the primary coil if the impedance shows ∞ which indicates that the coil breaks.

2.5.3 Secondary coil

Attached with spark plug. Measure the impedance between the wiring side of the spark plug cap and the terminals.

Standard: 5-11KΩ（20 ）

It shows good if the impedance is within the range of standard values.

The impedance ∞ indicates that the coil breaks.

Remove the spark plug cap. Measure the impedance between

the primary side wire of the ignition coil and the negative terminal.

Standard: 0.5-5.5KΩ±10％（20 ）

2.6 Trigger

*** Note**

Check the trigger on the engine.

Check

Remove the body guard.

Remove the trigger terminal.

Measure the impedance between the blue/white terminal of the side wire of the engine and the body GND.

Standard: 100-500Ω（20 ）

Replace the magnetor if the measured value exceeds the standard value.

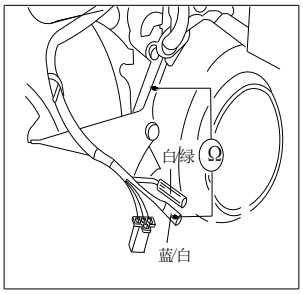

（白：white 蓝：blue 绿：green）

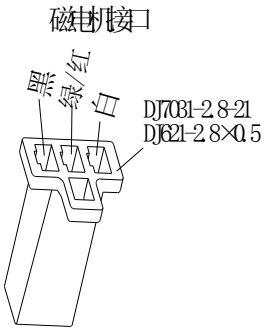

（磁电机接口：magnetor interface 黑：black 绿/红：green/red 白：white）

Startup System

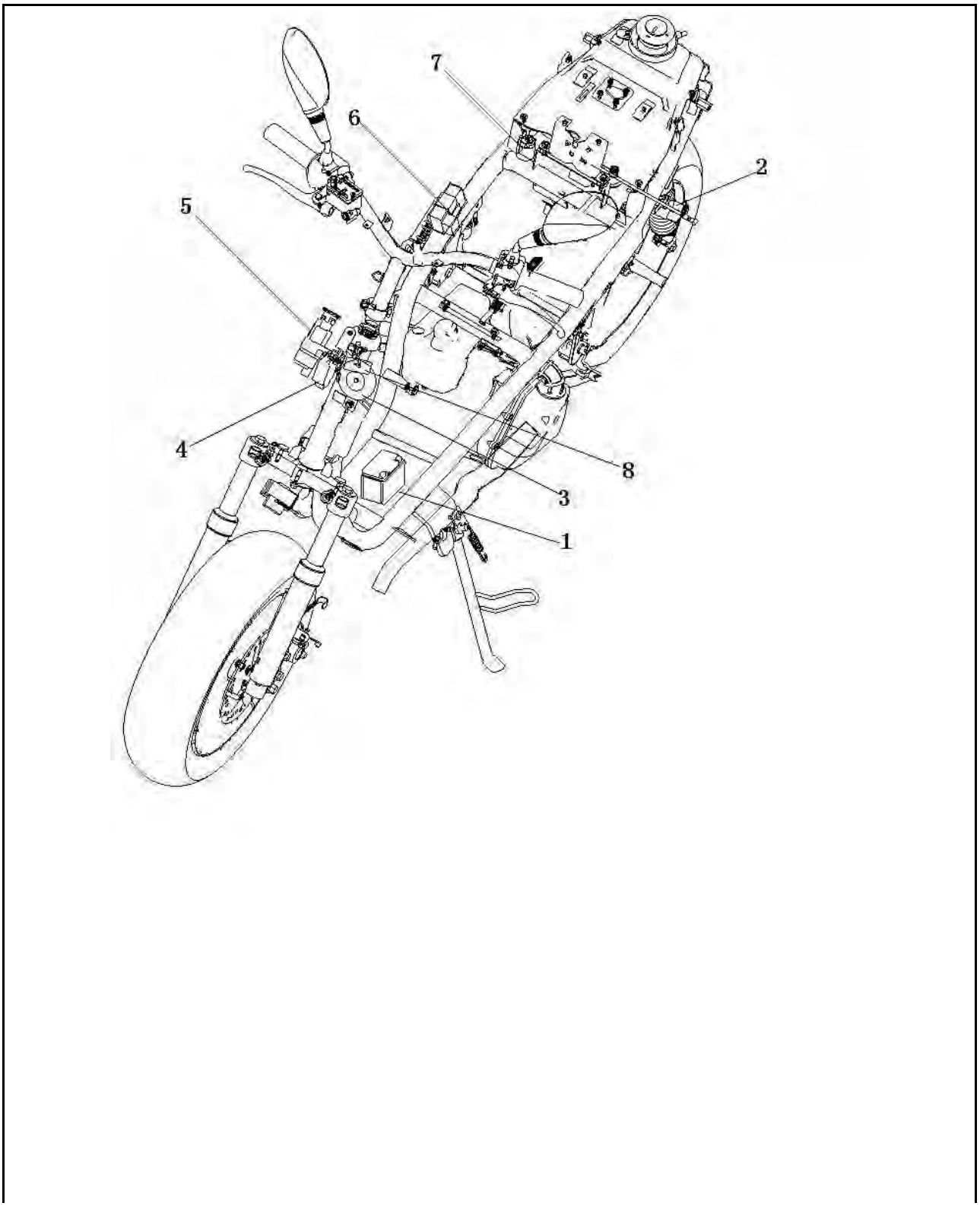

1. storage battery 12V，4AH 2. seat lock assembly 3. horn 4. rectifier 5. power lock assembly 6. CDI igniter 7. relay 8. release resistance

（启动示意图：**Startup Schematic Diagram**）

3. Startup System

3.1 Preparing documents

Work Instructions

Disassemble the startup motor on the engine.

For the disassembly of the startup clutch, please comply with related regulations

Preparing principles

Item	Standard	Limit for use
Length of the brush of the startup motor	6.2mm	3mm
Bushing of the startup idler shaft		8.3mm
Outer diameter of the startup idler shaft		7.94mm

Tightening torque force

Bolts for the clutch cover of the startup motor 12 N·m

Retaining nut for the clutch of the startup motor 95 N·m

Tools

Spanner for retaining nuts

Universal fixing spanner

3.2 Failure diagnosis

Startup failure	Weak in rotation of the startup motor	No rotation of RE rotary engine of the startup motor
• Fuse blow	• Low battery	• Poor startup clutch
• Low battery	• Poor wiring contact	• Reversal rotation of the startup motor
• Poor main switch	• Gear seized	• Low battery
• Poor startup clutch		
• Poor brake switch		
• Poor starter relay		
• Poor wiring contact		
• Poor startup motor		

3.3 Startup motor

3.3.1 Disassembly

*** Note**

Before the startup motor is disassembled, turn off the main switch, remove the GND wire of the battery, and then power on to check whether the startup motor works for ensuring safety.

Remove the wire clip of the startup motor.

Remove the fixing bolts of the startup motor, and dismantle the startup motor.

Roll the waterproof rubber case and dismantle the connector of the startup motor.

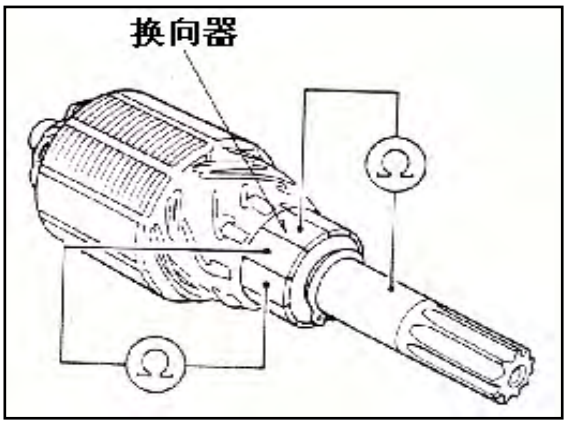

（换向器：commutator）

3.3.2 Breakdown

Remove screws in the shell, front cover, motor housing and other parts

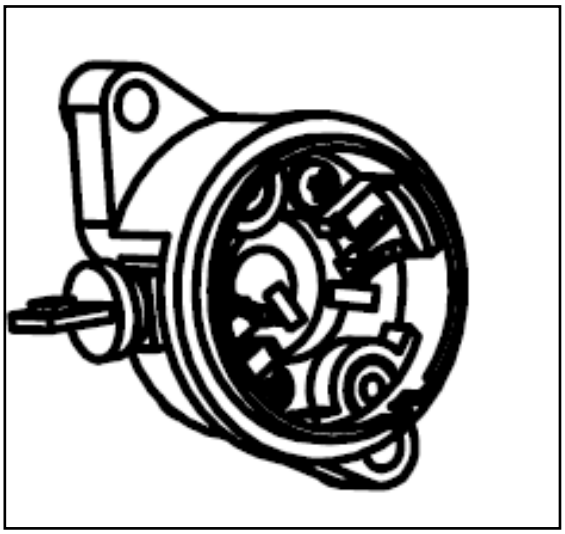

3.3.3 Check

Check other components.

Replace any part with abraded, damaged or burnt surface.

Clean the commutator surface if there is metal power

attached to it.
Check conduction between the surfaces of other components.
Ensure non-conduction between armature shafts of the commutator.
Check the conduction of the shell of the startup motor.
Ensure non-conduction between the conduction terminal and the startup motor shell.
Check conduction between the conduction terminal and the brush.
Replace any abnormal part.
Check conduction of the brush bracket. Replace it when there is conduction.
Measure the length of the brush.
Limit for use: replace it if lower than 3mm
Check smooth rotation of the needle bearing inside the front cover and whether it is loose when press-in.
Replace it if there is any abnormality.
Check whether the oil seal is abraded or damaged.

3.3.4 Assembly

Lubricate the oil seal inside the front cover with grease.
Install the brush on the bracket.
Lubricate moving parts at two ends of the brush shaft with grease.
Press each brush into the bracket and install the electrode front cover.

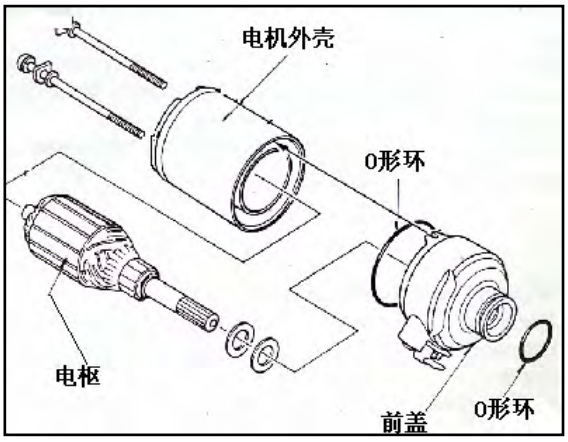

*** Note**
• Pay special attention that the contact surface between the brush and the armature shall not be damaged.
• Pay attention that the armature shaft shall not damage lips of the oil seal.

Install the new o-ring into the front cover.
Aim the screw hole of the motor shell at the screw hole of the front cover for installation.
Lock screws in the shell.

（o型环：o-ring 电机外壳：motor shell 电枢：armature 前盖：front cover)

*** Note**
When the shell and the front cover are assembled, it is easy to pull the front cover with magnet to attract the armature.
Press it gently for assembly

3.3.5 Installation

Install the lead of the startup motor and the dustproof boot.
Replace any damaged or abnormal o-ring.
Lubricate o-ring with fuel and then install it on the startup motor.
Install the wire clip for rear brake.

3.4 Starter relay

3.4.1 Check

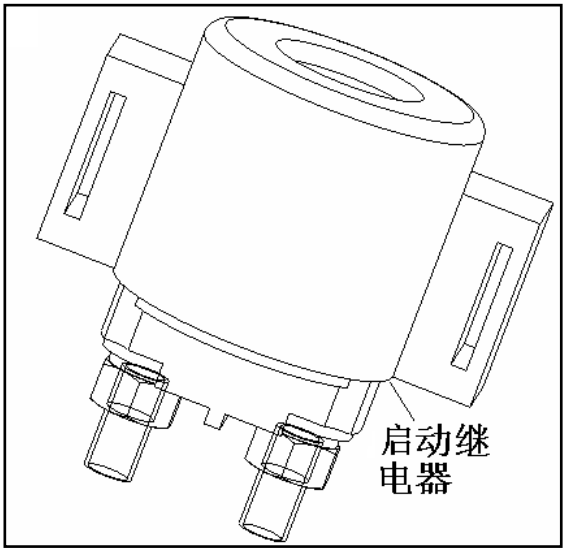

Remove the body guard.
When the main switch is “on”, check there is “click” sound at the time of pressing the startup motor.
With click sound, it is normal.
Without click sound: • check voltage of the starter relay;
• check the GND loop of the starter relay;
• check the movement of the starter relay.

3.4.2 Check voltage of the starter relay

Set up the main stand, and measure voltage between the negative pole of the green/yellow wire of the starter relay（启动继电器：starter relay）
terminal and the body ground connection.
When the main switch is “on”, hold the brake lever. The battery voltage shall comply with regulations.
When there is no voltage at the starter relay terminal, check the conduction of the brake switch and leads.

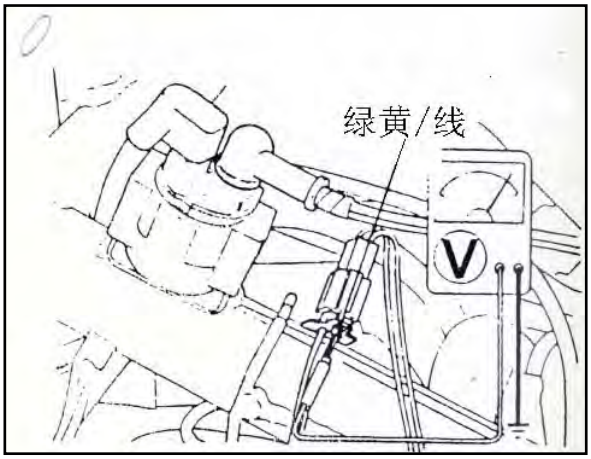

3.4.3 Check GND loop of the starter relay

Remove the starter relay connector.
Check conduction between the black wire of the lead terminal and the body ground connection.
When the startup button is pressed, it shall show good conduction between the black wire of the terminal and the body ground connection.
Check conduction of the startup button and leads when it is not conducted.

(绿黄/线：green/yellow wire)

3.4.4 Check

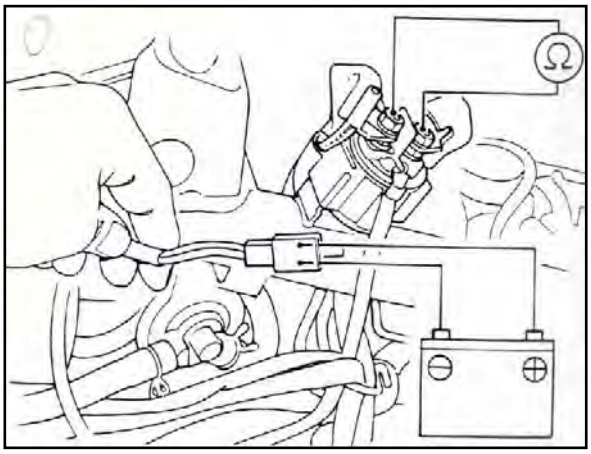

Connect the starter relay to the battery, and the terminal of the startup motor to the multimeter.
Connect the fully charged battery between the black wire and the green/yellow wire of the relay. The relay shall sound “click” and the multimeter shall indicate resistance of “zero”.

Bulbs/switches/meters

A	Iden. No. of headlamp: E3 00 1006
B	Iden. No. of front steering lamp: E_3 50R-001024
C	Iden. No. of tail lamp: E_{11} 50R-000054
D	Iden. No. of rear steering lamp: E_3 50R-001024
E	Iden. No. of front position lamp: E3 50 R001023
F	Iden. No. of rearview mirror: E_3 001002

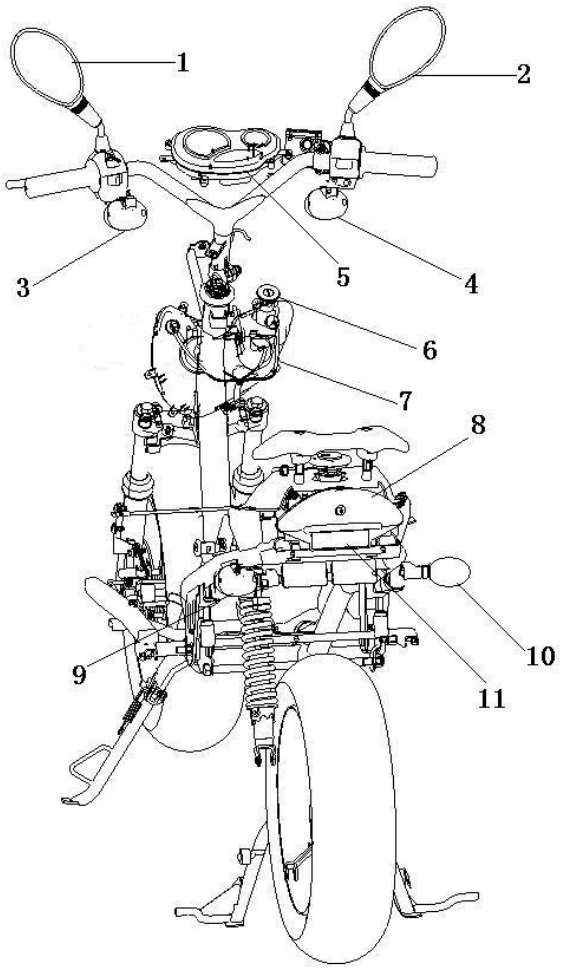

1. left rearview mirror assembly 2. right rearview mirror assembly 3. front left steering lamp assembly 4. front right steering lamp assembly 5. meter 6. power lock assembly 7. headlamp (twin lamps) 8. tail lamp 9. rear left steering lamp assembly 10. rear right steering lamp assembly 11. rear reflector

4. Bulbs/Switches/Meters

4.1 Preparing documents

Work Instructions

Remove the switch from the vehicle to measure its conduction

4.2 Failure diagnosis

When the main switch “ON” is not light, it is due to

- Poor bulbs.
- Poor switch.
- Bad contact or broken wires

4.3 Replacement of headlamp bulbs

4.3.1 Disassembly

Remove the foot guard and pedal assembly.
Remove the front shield.
Disconnect the headlamp connector.
Remove fixing screws for dismantling the headlamp.
Remove the headlamp.
Remove the glass of the headlamp.
Fix the headlamp and rotate the socket clockwise to remove the bulb.

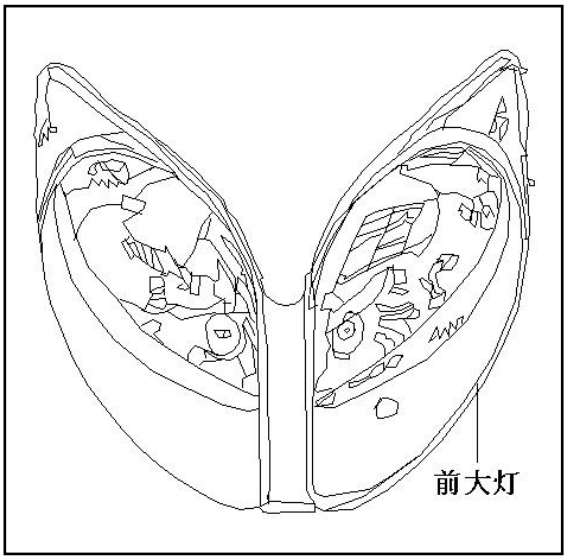

（前大灯：front lamp）

4.3.2 Installation

Install the bulb in reverse order.

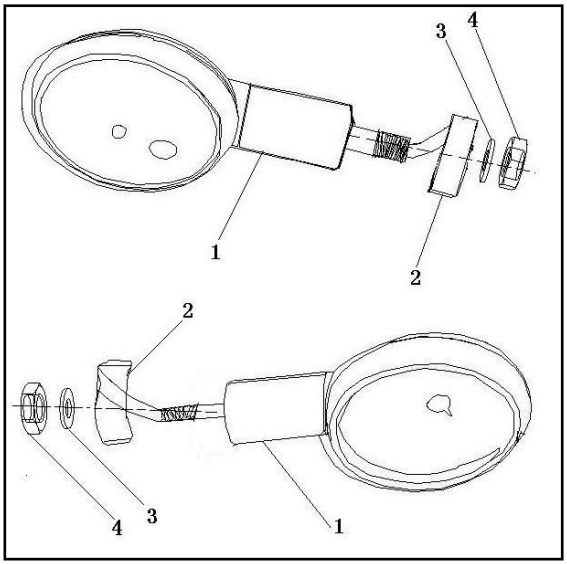

4.4 Replacement of rear steering lamp bulbs

4.4.1 Disassembly

Remove the foot guard and pedal assembly.
Remove the front shield, and disconnect the steering lamp connecting wire.
Loosen the fixing nuts (4) of the steering lamp.
Remove the bulb from the socket.

4.4.2 Installation

Install the bulb in reverse order.

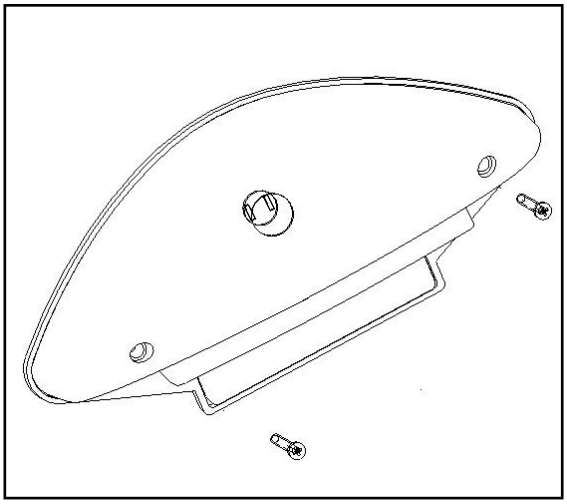

4.5 Replacement of tail lamp bulbs

4.5.1 Disassembly

Remove the seat.
Remove the fixing screws of rear left/right guard for dismantling the tail lamp shade.
Disconnect the tail lamp connector.
Remove the rear left/right guard, and then the tail lamp shade.
Remove the tail lamp

4.5.2 Installation

Install the tail lamp in reverse order.

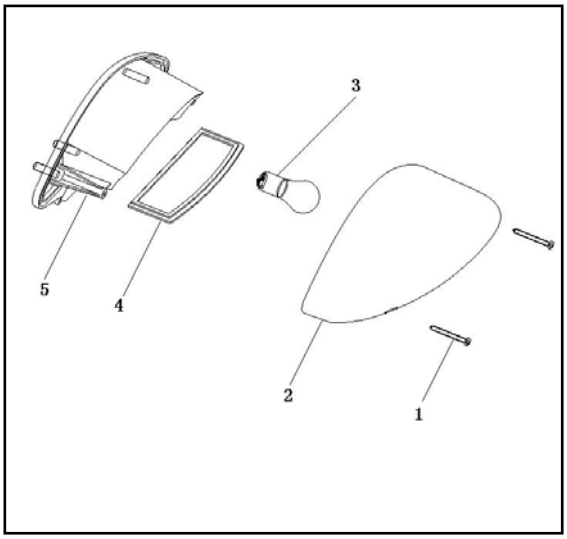

4.5.3 Replacement of tail lamp bulbs

4.5.3.1 Disassembly

Remove fixing screws of the tail lamp shade.
Remove the tail lamp shade for dismantling tail lamp bulb.
Remove the bulb from the socket.

4.5.3.2 Installation

Install the bulb in reverse order.

4.6 Meter

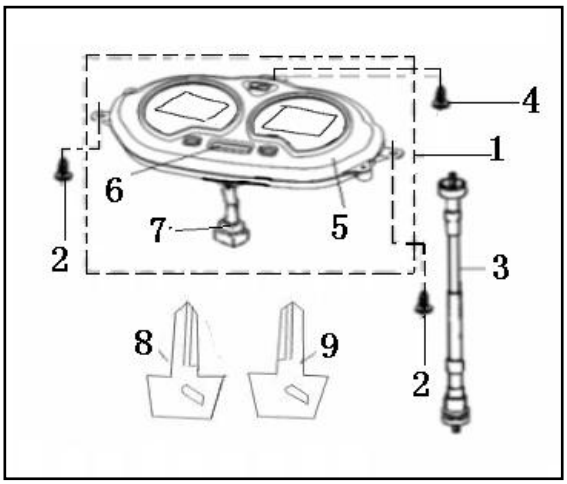

Remove the left and right rearview mirror.
Remove fixing screws of the handlebar cover.
Remove the decorating cover of the upper handlebar shade.
Remove the odometer assembly to dismantle the odometer.
Install the speedometer in reverse order.

4.7 Main switch

4.7.1 Check

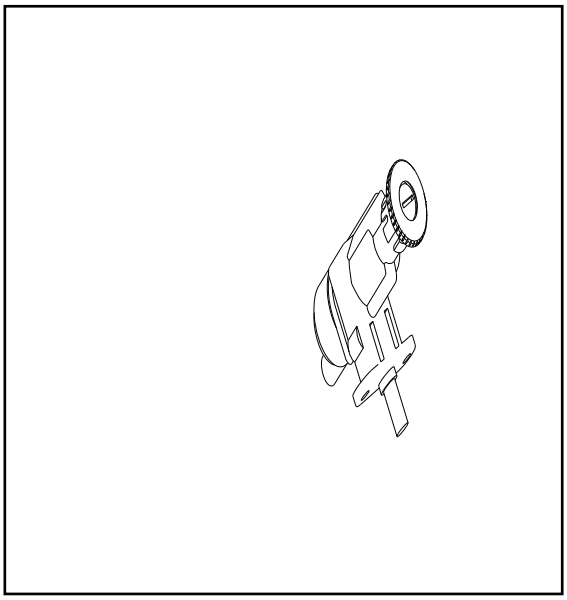

Remove the front guard.
Remove the foot guard.
Remove the main switch lead terminal.
Check conduction of the terminal

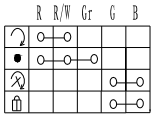

4.7.2 Replacement of main switch

Remove the foot guard and pedal assembly.
Remove the front shield.

Remove the fixing bolts and the fixing seat of the main switch.
Remove the fixing bolts and replace the main switch

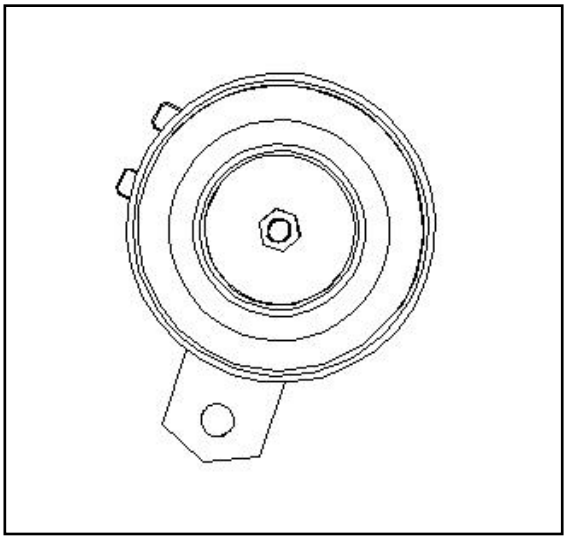

4.8 Horn

Check

Remove horn wires.
It shows good when the horn wire is connected to the battery

4.9 Handlebar switch

Remove the left/right rearview mirror assembly.
Remove the fixing screws of the left/right combined switch.
Loosen the left/right combined switch.
Remove the right grip assembly and the left steering grip.

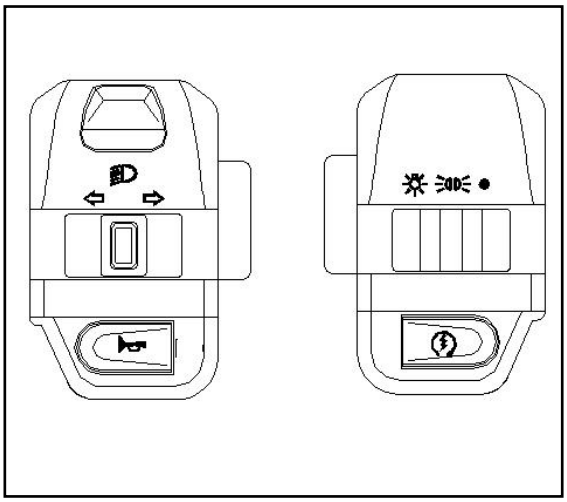

Remove the left/right combined switch.

逻辑图

	Y/R	BL	LBL		O	G/B	G/W
	○	○		⇦	○	○	
	○		○	○			
				⇨	○		○

	G/R	Y/R	N/W	LR	Y
	●	●			●
	●		●		●
●	●			●	

逻辑图: Logic Diagram

Inspection and maintenance of the chassis

Torque Force Table of Chassis Fasteners

Name of fastening parts and fasteners	Tightening torque（N·m）
Fuel pump assembly fixing bolt	5-9
Mounting bolt of front brake cylinder assembly	22-29
Brake handle fixing bolt	5-9
Fixing screw of muffler decorating shade	5-9
Fixing bolt of handlebar weld assembly	40-60
Front wheel spindle locking nut	55-62
Front absorber fixing bolt	37-44
Rear wheel fixing nut	100-113
Rear absorber top nut	37-44
Rear absorber bottom nut	22-29
Rear rack fixing screw	22-29
Fuel tank fixing bolt	5-9
Helmet box fixing bolt	5-9
Muffler fixing bolt	22-29
Muffler connector fixing bolt	5-9
Engine fixed axis	55-62

Front disc brake

A	Dia. of front brake disc: 190mm
B	Thickness of front brake disc: 3.6 mm Limit for use: 2.6mm
C	Thickness of friction disc: 5.0mm Limit for use: 4.0mm
D	Torque for mounting bolt 8: 5-9N·m
E	Torque for mounting nut 27: 37-44N·m
	Free stroke of brake handle:

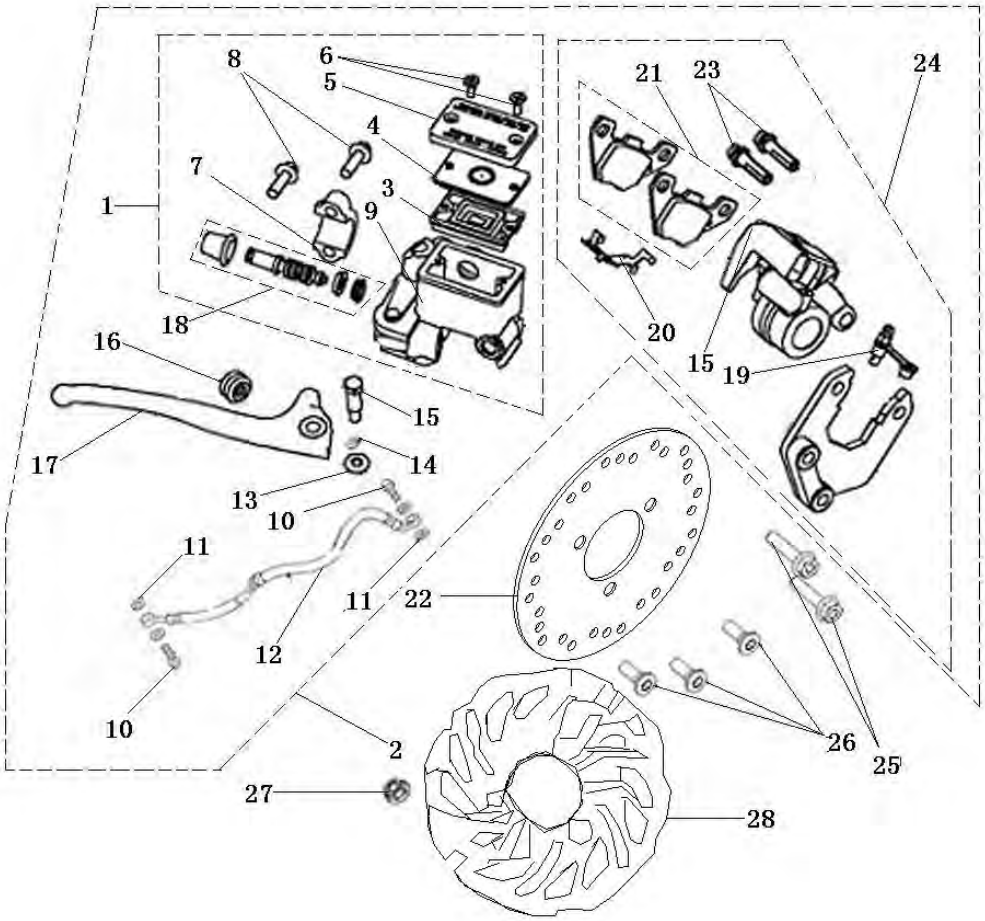

1. fuel pump assembly 2. brake assembly 3. oil cup pad 4. fuel pump gasket 5. oil cup cap 6. screw M4×10 7. fixing cover 8. bolt M6×23 9. fuel pump body 10. connecting bolt 11. gasket 12. brake hose assembly 13. nut M6 14. spring gasket 6 15. handle fixing bolt 16. handle return spring 17. brake handle 18. plunger assembly 19. dust cover of bleed nipple 20. spring piece 21. friction disc assembly 22. front brake disc 23. little guide 24. brake cylinder assembly 25. bolt M8×36 26. front brake disc mounting bolt 27. nut M10×1.25 28. flower type brake disc

Rear drum brake

A	Torque for mounting nut 5: 100-113N·m
B	I.D. of brake drum :110mm Abrasion limit: 111mm
C	Thickness of brake shoe: 4.5mm Limit for use: 3.5mm
D	Free stroke of rear brake handle: 10-20mm
E	Torque for mounting bolt 4: 22-29N·m

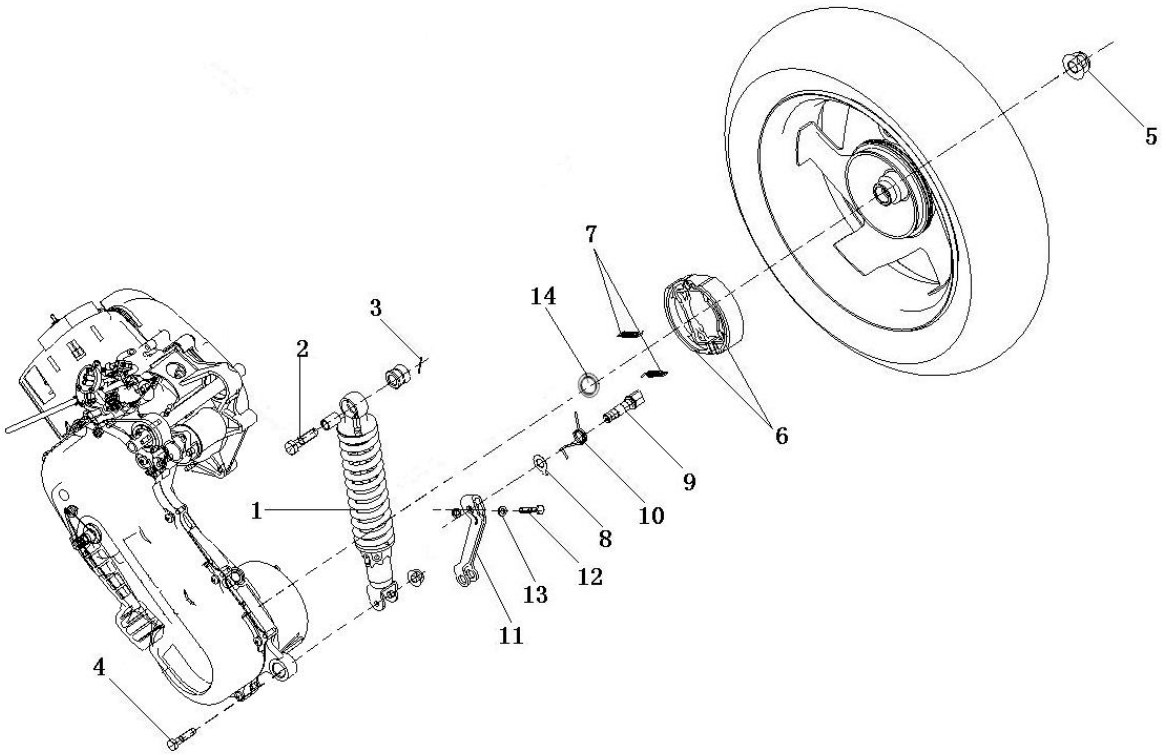

1. rear absorber assembly 2. bolt M10X1.25X40 3. cotter pin 4. bolt M8X35 5. nut M14X1.5 6. brake shoe assembly 7. brake shoe spring 8. rear indicator 9. rear brake camshaft 10. rear brake return spring 11. rear brake swing arm assembly 12. rear swing arm mounting bolt 13. o-ring 14. dust cover

5. Brake

5.1 Maintenance instruction

Work Instructions

*** Note**

- Do not stain the brake assembly with oil spots during installation or disassembly.
- Clean it with required cleaning agent to maintain the brake performance.

Check brake before riding.

5.1.1 Specification

Item	Standard (mm)	Limit for use (mm)
Thickness of front brake disc	3.6	2.6
Thickness of front friction disc	5.0	4.0
Diameter of front brake disc	190	-
I.D. of rear brake drum	110	-
Thickness of rear brake shoe	4.5	3.5

5.1.2 Torque force

Fixing bolts for fuel pump assembly 5-9 N·m

Mounting bolts for front brake cylinder assembly 22-29 N·m

Fixing bolts for brake handle 5-9 N·m Fixing nuts for rear wheel 100-113 N·m

5.2 Failure diagnosis

Brake

Poor brake performance Slow reaction or tight lever

1. Improper adjustment of the brake 1. Improper adjustment of the brake

2. Abraded brake shoe or friction disc assembly 2. Abraded brake shoe or friction disc assembly

3. Improper installation of brake shoe or friction disc assembly

3. Improper installation of brake shoe or friction disc assembly

4. Stained brake shoe or friction disc assembly

Abnormal noise

1. Abraded brake shoe or friction disc assembly
2. Stained brake shoe or friction disc assembly of the front brake disc

5.3 Front disc brake

5.3.1 Disassembly

***Note**

• Replace the friction disc assembly.

• If the friction disc will be used again, mark it before disassembly so as to reinstall it at the original place.

Remove following assemblies from the right grip and the front absorber.

Front brake:

1.brake handle（17）

2. fuel pump assembly（1）

3. brake hose assembly（12）

4. brake cylinder assembly（24）

5. front brake disc（22）

Note: for breakdown details, see P79.

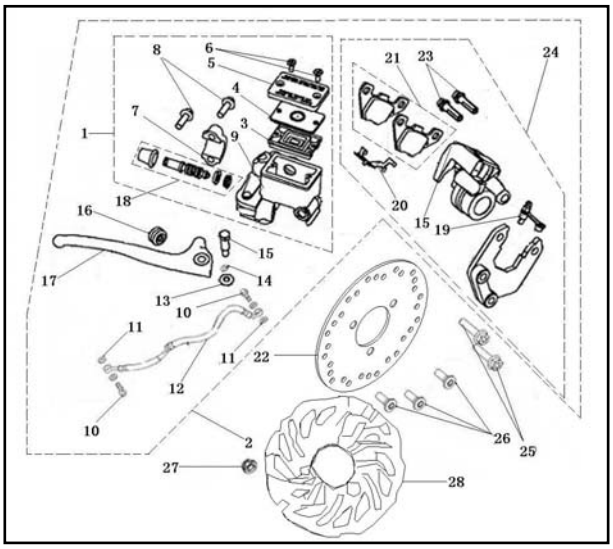

*** Note**

• Do not stain the brake assembly with oil spots during installation or disassembly.

• Clean it with required cleaning agent to maintain the brake performance.

Loosen fixing bolts for the brake cylinder assembly.

Remove the brake cylinder assembly from the front absorber.

Remove the front wheel spindle.

Remove the front wheel.

Remove the brake disc from the front wheel.

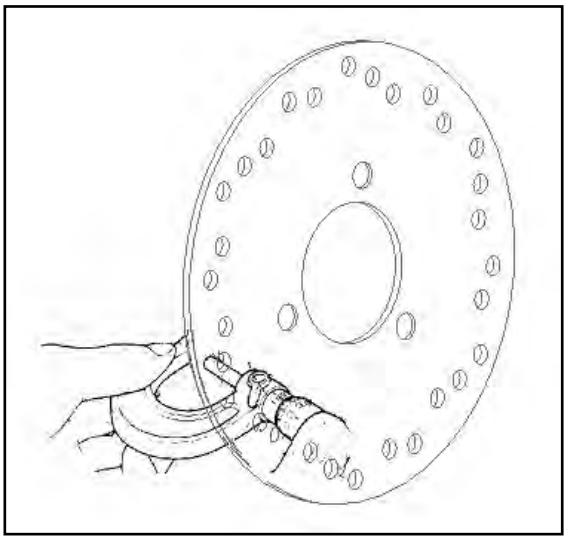

5.3.2 Check

Check whether the friction disc assembly is abraded. Replace brake shoes if necessary.

Measure the friction disc assembly and the front brake disc. Record maximum values.

Specification

FACT 50 4T Diameter of the front brake disc φ190mm

Thickness of the front brake disc 3.6mm

*** Note**

• Measurement with micrometer.

Measure the thickness of the friction disc assembly.

If the thickness of the front brake disc or the friction disc assembly is below the required value for maintenance or it is stained with grease, please replace it.

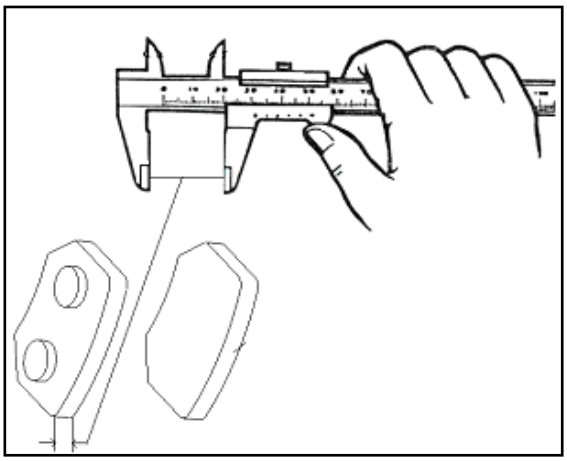

Limit for use: friction disc 5.0mm

Front brake disc 2.6mm

Note:

Replace friction discs in pair.

The friction disc can be measured within the motorcycle without removing down.

5.3.3 Installation

Install the front brake disc and the front wheel.

Install the front brake hose assembly and the brake cylinder assembly.

Do not stain the friction discs and the front brake disc with grease.

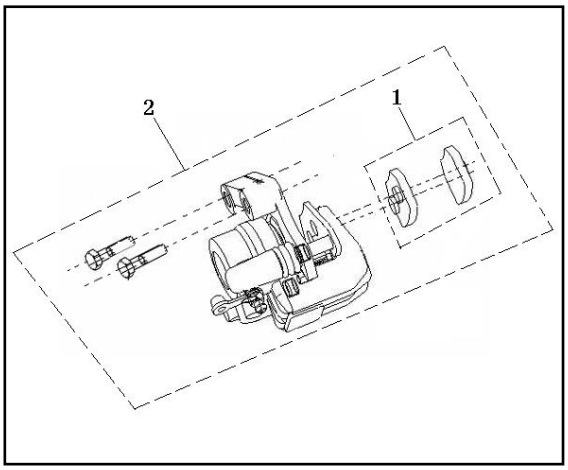

*** Note**

Any grease on friction discs will reduce the brake performance and even lead to failure.

Tighten bolts and nuts to the required torque force.

Torque force:

Fixing bolts for fuel pump assembly 5-9 N·m

Mounting bolts for front brake cylinder assembly 22-29 N·m

Do not stain friction discs with oil spots.

Use brake cleaning agent to clean friction discs with oil spots.

*** Note**

Any oil spot on friction discs will reduce brake performance.

5.4 Rear drum brake

5.4.1 Disassembly

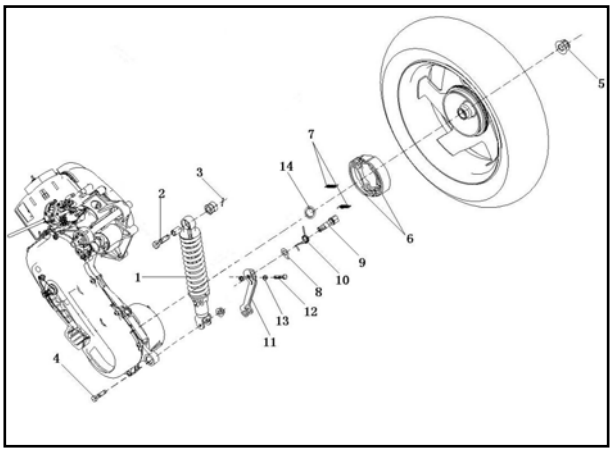

Remove the muffler.
Remove the fixing nuts of the rear wheel.
Remove the rear wheel.
Remove the brake shoe assembly.

*** Note**

• Replace the brake shoe assembly.

• If the brake shoe will be used again, mark it before disassembly so as to reinstall it at the original place.

Remove following assemblies from the rear wheel.

Rear brake:

1. rear swing arm mounting bolts（12）
2. rear brake swing arm assembly（11）
3. rear wheel fixing nuts（5）
4. rear indicator（8）
5. rear brake return spring（10）
6. rear brake camshaft（9）
7. brake shoe assembly（6）
8. brake shoe spring（7）
9. outer tire E11 75R 000216
10. rear rim assembly 3.50×12

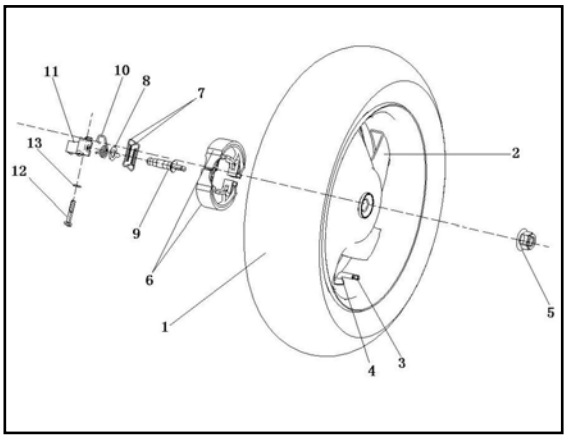

Note: for breakdown details, see P80.

5.4.2 Check

Check whether the brake drum and the brake shoes are abraded. Replace it if necessary.

Measure the maximum brake shoe thickness and the maximum inner diameter of brake drum.

*** Note**

• Measure the brake shoe thickness and the inner diameter of brake drum with micrometer.

If the thickness of the brake shoe is below the required value for maintenance or it is stained with grease, please replace it.

Note: replace brake shoes in pair.

Inner diameter of the rear brake drum φ110mm

Thickness of rear brake shoe 4.5mm

Limit for use: inner diameter of brake drum 111mm

brake shoe 3.5mm

制动鼓内径：inner diameter of brake drum

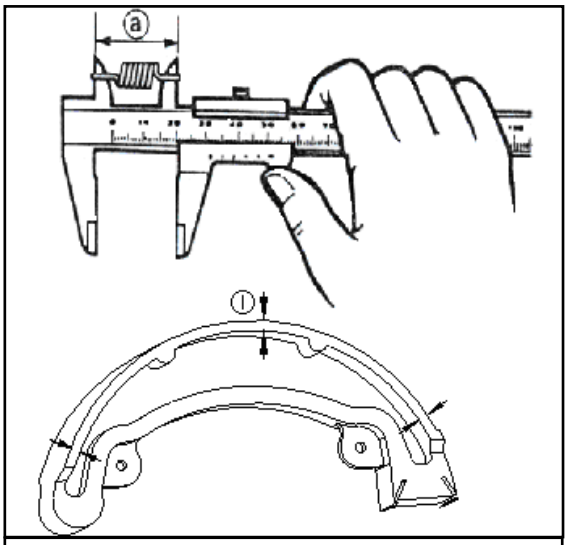

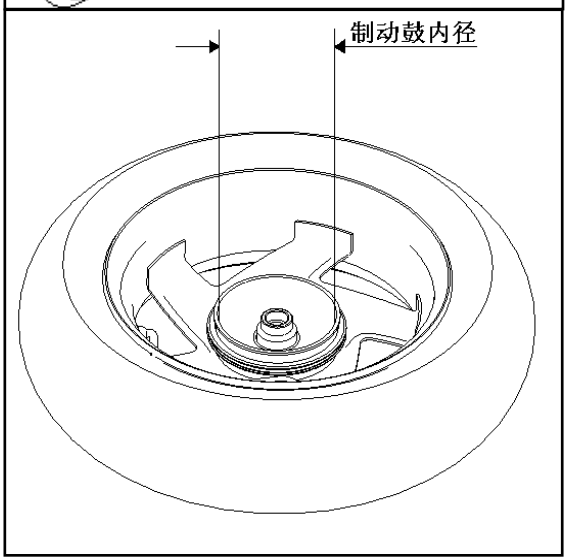

5.4.3 Installation

Install the brake shoe assembly.
Install the rear wheel.
Install the muffler.

*** Note**
Any grease on brake shoes will reduce the brake performance and even lead to failure.

Tighten bolts and nuts to the required torque force.
torque force:
Fixing nuts for rear wheel: 100-113 N·m
Do not stain brake shoes and brake disc with oil spots.
Use brake cleaning agent to clean brake shoes and brake disc with oil spots.
Rear brake:

1. rear swing arm mounting bolts（12）
2. rear brake swing arm assembly（11）
3. rear wheel fixing nuts（5）
4. rear indicator （8）
5. rear brake return spring（10）
6. rear brake camshaft（9）
7. brake shoe assembly（6）
8. brake shoe spring（7）
9. outer tire E11 75R -000216
10. rear rim assembly 3.5×12

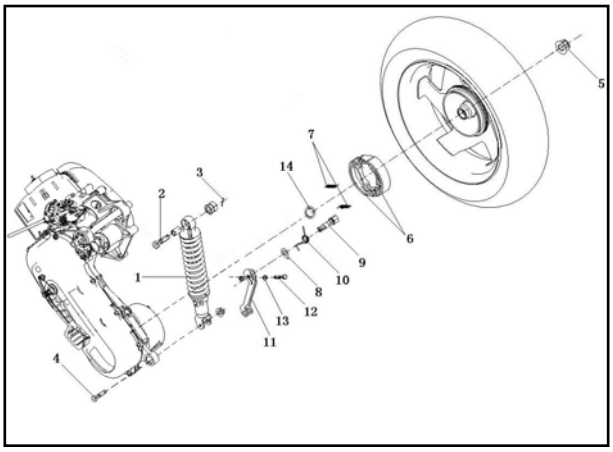

*** Note**
Any oil spot on brake shoes will reduce the brake performance.

Note: for breakdown details, see P80.

Body

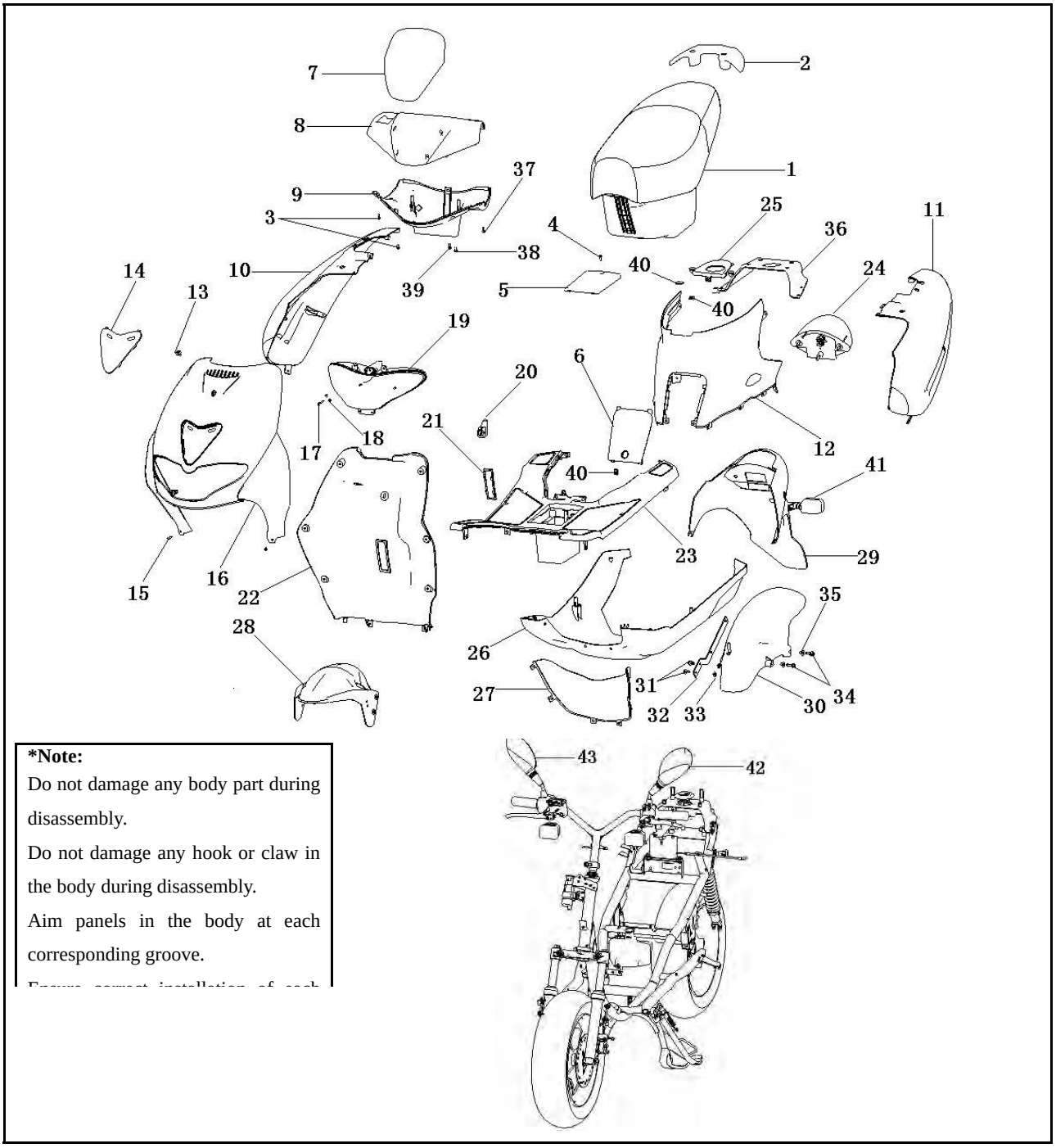

***Note:**

Do not damage any body part during disassembly.

Do not damage any hook or claw in the body during disassembly.

Aim panels in the body at each corresponding groove.

Ensure correct installation of each

1seat assembly 2rear rack 3 tapping screw ST3×10 4 tapping screw ST5×16 5 battery box cover 6 helmet box front cover 7odometer shade 8 handlebar cover 1 9 handlebar cover 2 10 right guard 11left guard 12 connecting bracket of the left/right guard I 13 screw M6×14 14 decorating panel of the front shield 15 tapping screw ST4.2×16 16 front shield 17 tapping screw ST5×16 18 tapping screw ST4.8×16 19 headlamp 20helmet hook 21 frame number cover 22 foot protection board 23 foot pedal 24 tail lamp 25 connecting bracket of the left/right guard II 26 lower cover of foot protection board 27 front inner fender 28 front fender 29 rear license plate bracket 30 rear fender 31bolt M6×12 32rear fender bracket 33 card nut M6 34 bolt M6×20 35 rear fender spacer bush 36 rear shelves bearing 37 tapping screw ST4×12 38 tapping screw ST5×12 39 screw M5×14 40 card 41 rear left steering lamp 42 left rearview mirror 43 right rearview mirror

6. Body

Dismantle the body in following order:

Left/right rearview cover→ odometer shade→ handlebar cover 1→ handlebar cover 2→ front inner fender→ helmet

↓

Hook → frame number cover→ foot protection board → front shield→ headlamp → set assembly→ helmet

↓

Front cover→ connecting bracket of the left/right guard→ left/right guard→ front fender→ rear rack→ lower cover of protection board

↓

→ battery box cover→ foot pedal→ tail lamp→ rear left/right turn light→ rear license plate bracket→ rear fender

***Note**

Do not damage any body part during disassembly.

Do not damage any hook or claw in the body during disassembly.

Aim panels in the body at each corresponding groove.

Ensure correct installation of each hook or claw part during assembly.

Do no damage any part during assembly.

Front wheel

A	Tire size: outer tire 120/70-12
	Auth. No. of the front wheel outer tire: E11 75R 000210
B	Rim size：3.50×12
C	Rim run-out limit: Vertically: 2.0mm Horizontally: 2.0mm
D	Front wheel spindle bending limit: 0.2mm

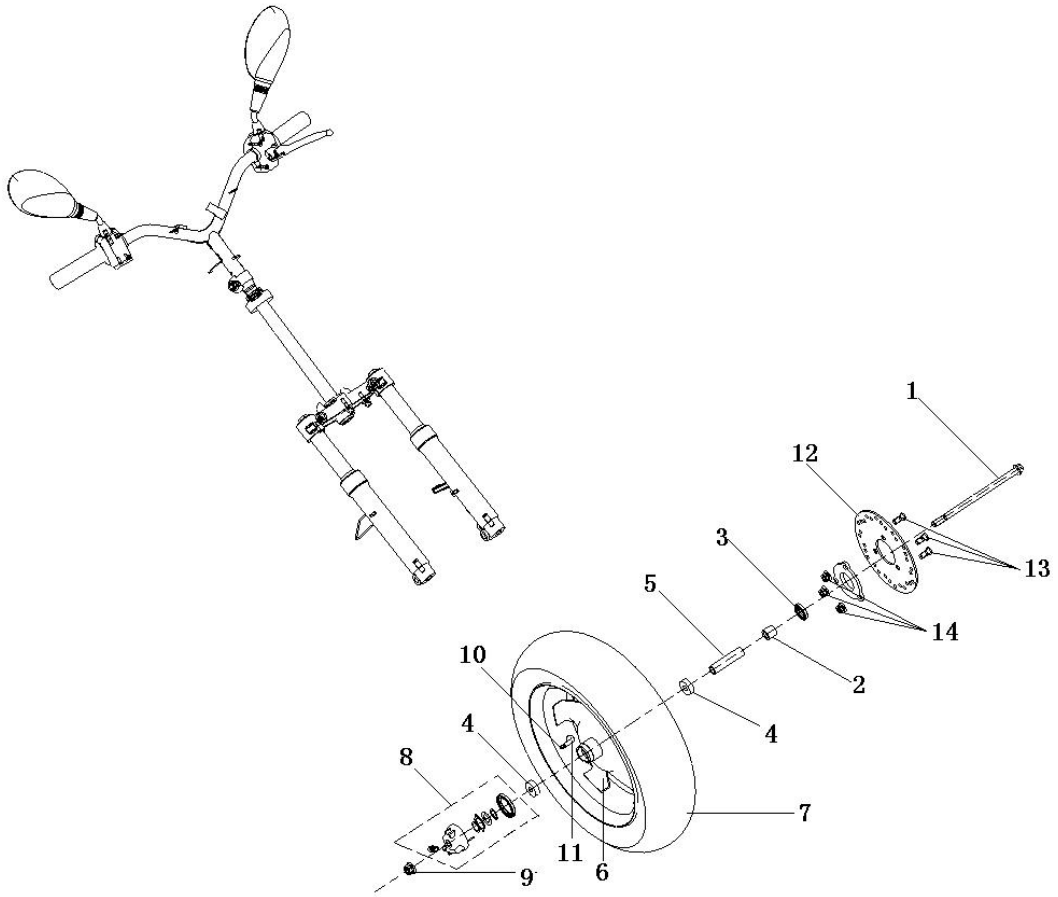

1 front wheel spindle M12X1.25X224 2 left spindle sleeve of front wheel 3 oil seal 22×35×7 4 bearing 6201-2RS 5 middle spindle sleeve assembly 6 front rim 3.50×12 7 tire 120/70-12 8 gear housing assembly 9 nut M12X1.25 10 valve cap 11 valve 12 front brake disc 13 installation nut of front brake disc 14 nut

Front suspension

A	Torque for mounting bolt 12: 37-44N·m
B	Torque for mounting bolt: 5-9N·m
C	Number of upper steel balls: 21
	Number of lower steel balls:：21

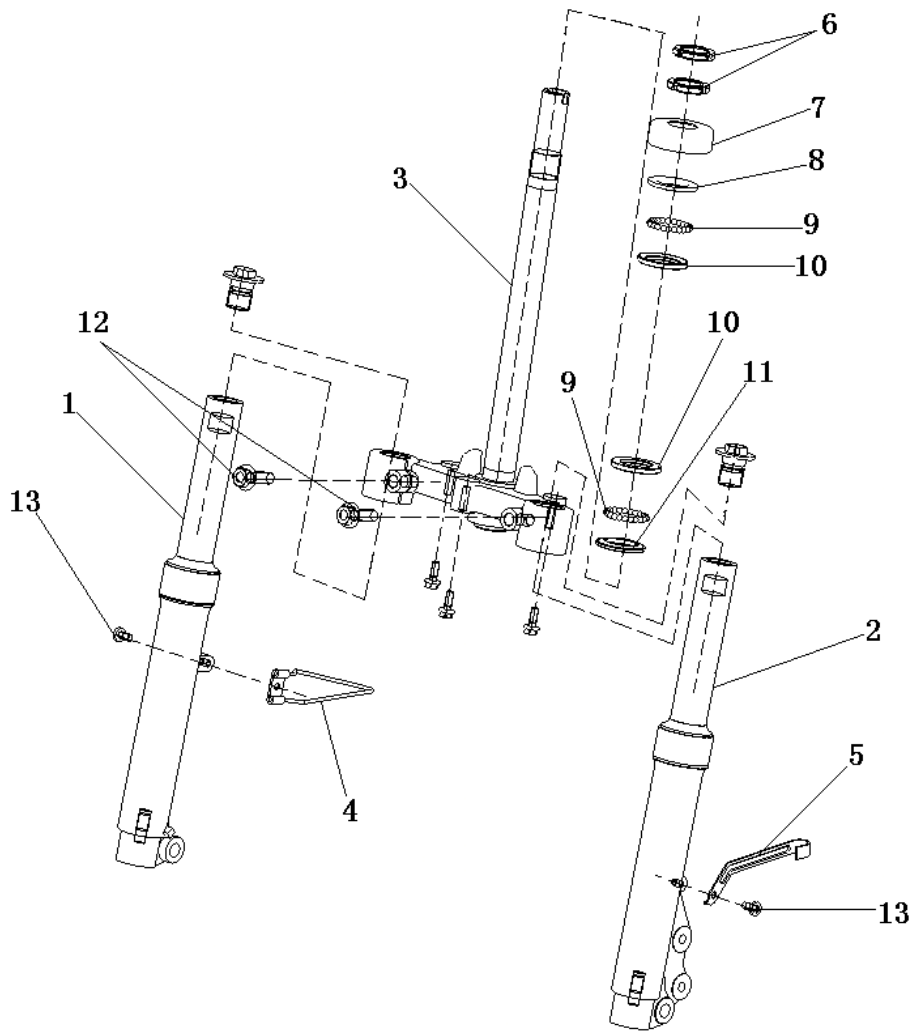

1 front right absorber assembly 2 front left absorber assembly 3 weld assembly of lower connecting bracket 4 odometer cable clamp 5 brake cable clamp 6 gland nut 7 dust cover 8 one-piece cup 9 steel ball φ5 10 upper cup of the lower bearing 11 lower cup of the lower bearing 12 bolt M10×1.25×30 13 bolt M6×16

Handlebar

A	Torque for mounting bolt 2 (handlebar fixing bolts): 40-60N·m
B	Free stroke of front brake handle: 10-20mm
C	Free stroke of rear brake handle: 10-20mm
D	Free stroke of throttle lever (Fig. 6): 2-5mm

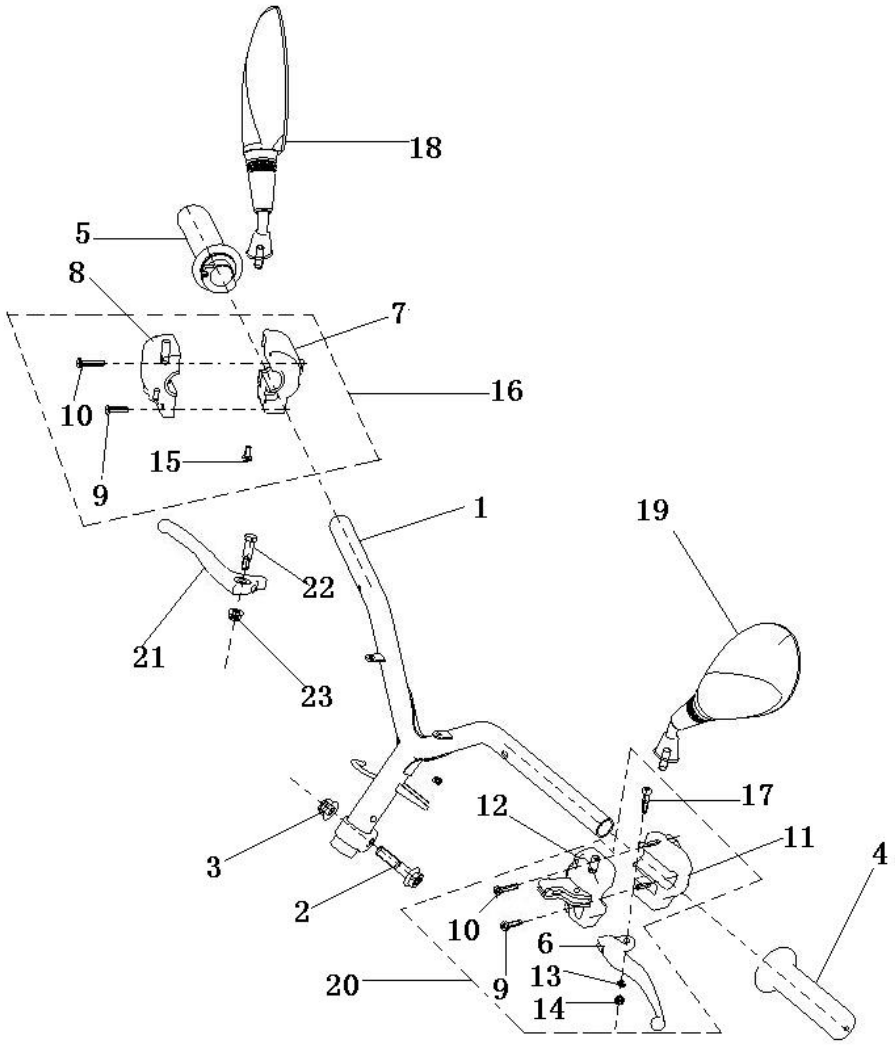

1 handlebar weld assembly 2 bolt M10×1.25×45 3 nut M10×1.25 4 left grip 5 throttle lever assembly 6 left handle 7 right combined switch 8 right combined switch fitting seat 9 screw M5×20 10 screw M5×25 11 left combined switch assembly 12 left combined switch assembly fitting seat 13 spring washer 5 14 nut M5 15 screw M5×20 16 right combined switch assembly 17 handle set screw M5 18 right rearview mirror 19 left rearview mirror 20 left combined switch assembly 21 right handle 22 handle set screw M5 23 nut M5

7. Front Wheel / Front Suspension

7.1 Preparing documents

Work Instructions

Before removing the front wheel, you should use jack to support the body bottom and suspend the front wheel which shall not be reversely rotated.

Pay attention that brake shoes, friction disc assembly and front brake disc shall not be stained with grease during operation.

Motorcycle Standards

Measurement points	Item		Standard (mm)	Limit for use (mm)
Front wheel spindle	Bending			0.2
Front wheel	Rim shimmy	Vertically		2.0
		Horizontally	Within 1.0	2.0

Torque force

Tools

Fixing bolts for handlebar weld assembly 40-60 N·m **Bearing puller**

Locking nut for the front wheel spindle 55-62 N·m **Locking nut spanner**

Fixing bolts for the front absorber 37-44 N·m

7.2 Failure diagnosis

7.2.1 Difficulty in steering

Failure of the steering handle bearing.

Damaged steering handle bearing.

Low tire pressure.

Flat tire.

7.2.2 Unsteady steering

Damaged steering handle bearing.
Low tire pressure.
Bending of the front fork or the front wheel spindle.
Deformed or unbalanced front tire.

7.2.3 Front tire shimmy

Deformed rim.
Loose front wheel bearing.
Poor tire.

7.2.4 Difficulty in wheel rolling

Failure of wheel bearing or gear housing.

7.2.5 Abnormal noise of the front absorber

Fricative sound of the absorber guard.
Loose bolts in the absorber.

7.3 Front wheel

7.3.1 Disassembly

Note:
Support the motorcycle firmly.

Loosen the mounting bolts of the brake cylinder assembly.
Remove the brake cylinder assembly.
Place a proper holder under the engine to lift the front wheel.
Loosen the fixing nut of the front wheel spindle（9）; remove the front wheel spindle（1） and the front wheel.

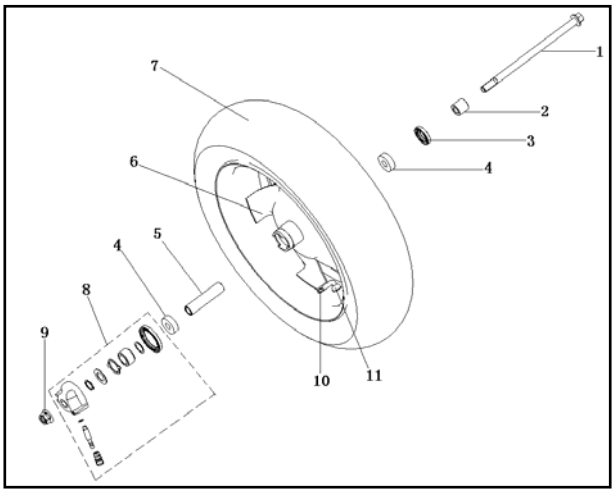

Remove the gear housing assembly（8）.
Remove the front brake disc.

Remove the sleeve, oil ring and bearing 6201-2RS, and middle sleeve assembly and bearing 6201-2RS.

***Note: fro the disassembly and installation of the front wheel, see P88.**

7.3.2 Check

7.3.2.1 Check the bending of the wheel spindle

Place the wheel spindle on the V-base and measure the eccentricity ratio with a dial indicator.

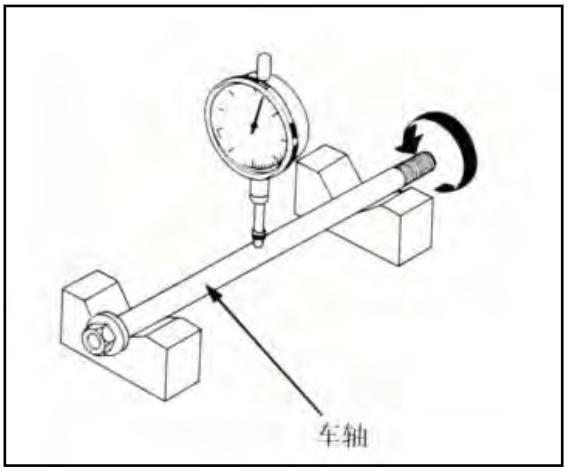

Limit for use: replacement when beyond 0.2mm

7.3.2.2 Check the rim shimmy

Place the rim on a precision bracket
and check the rim shimmy.
Rotate the wheel by manual and read indication.
（车轴：spindle）

Limit for use:
Vertically: replacement when beyond 2.0mm
Horizontally: replacement when beyond 2.0mm

7.3.2.3 Check the front wheel bearing

Remove the front wheel spindle and the front brake disc.
Remove the left bushing and the oil seal of the front wheel.
Remove the bearing.

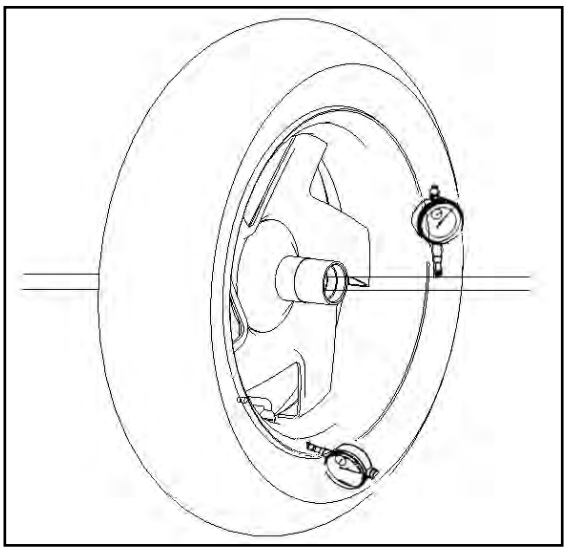

Check rolling of the bearings.
The bearings will not roll if abraded or loosened. Replace it.

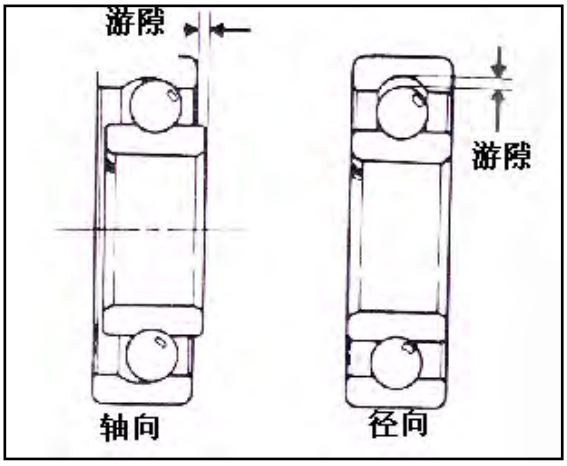

（游隙clearance　轴向axially　径向radially）

7.3.3 Bearing replacement

Remove the front wheel spindle, front wheel, middle spindle sleeve and left spindle sleeve; then remove the oil seal and the bearing respectively with oil seal remover and bearing puller.

Note: replace dismantled bearings with new ones.
Lubricate the bearings with grease during installation.
Then press the bearings in with bearing installation tools.

*** Note**

• Bearings must be pressed in horizontally.

7.3.4 Installation

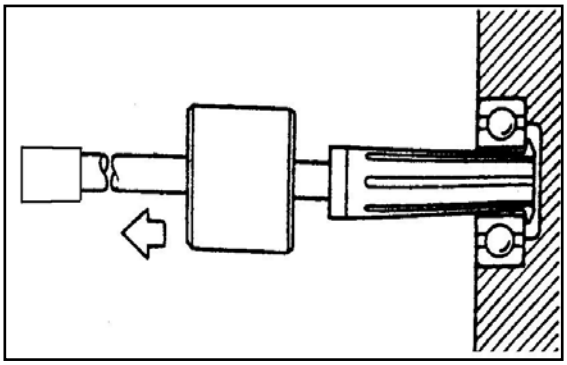

Install it in reverse order.
Instructions:
Lubricate the front wheel spindle, gear housing assembly, oil seal (opening), spindle sleeve, bearing 6201-2RS and middle spindle sleeve assembly.
Albany grease is suggested.

Install the front wheel spindle（1）, front wheel, gear housing assembly（8）and nut M10X1.25（9）.

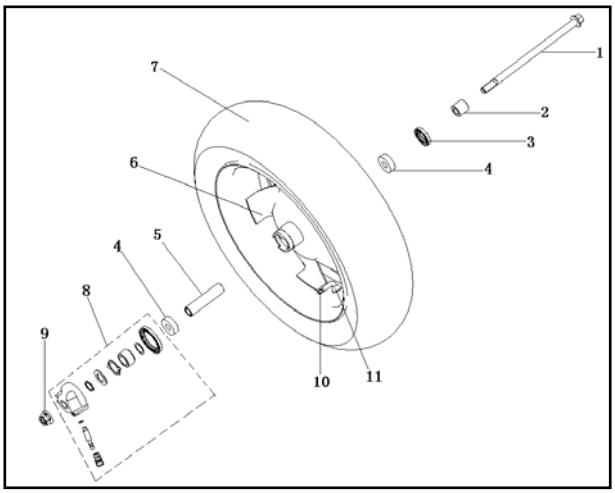

When the gear housing assembly（8）is installed, the odometer gear housing assembly shall be aligned well. If the front wheel spindle is not well aligned and locked, the odometer housing assembly will be deformed.
Install the brake cylinder assembly on the front rim.
Tighten the front wheel spindle (shown in the right picture).

*** Note: for the disassembly and assembly of the front suspension of FACT 50 4T, please see P88.**
Torque force:
Locking nuts for the front wheel spindle 55-62 N·m

7.4 Steering handle

7.4.1 Disassembly

Remove the rearview mirror assembly.
Remove the fixing screws of the decorating covers of the upper/lower handlebar shade.
Remove the decorating cover of the upper handlebar cover, and then the meter.
Remove the front shade assembly.
Remove the left/right combined switch assembly.
Remove the fuel pump assembly.
Remove the left grip and the throttle lever assembly.
Loosen the fixing bolt (2) and nut (3) of the handlebar weld assembly.
Remove the handlebar weld assembly（1）.

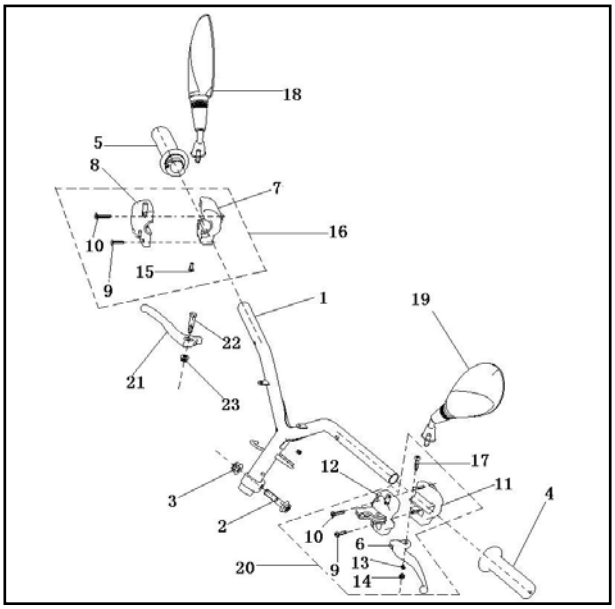

7.4.2 Installation

*** Note: for the disassembly and assembly of the handlebar, please see P90.**

Install it in reverse order.

Fixing bolt of handlebar weld assembly

Torque force: 40-60 N·m

7.5 Front fork

7.5.1 Disassembly

Remove the front wheel.

Remove the body guard.

Remove the brake hose and the odometer cable.

Remove the handlebar.

Remove the gland nut (6) and the dust cover (7).

Remove the one-piece cup (8) and steel balls (9).

Remove the front fork.

Remove the upper/lower cup (10,11) of the lower bearing and steel balls (9).

Loosen the fixing bolt (12) of the front absorber.

Remove the front left/right absorber assembly (1,2).

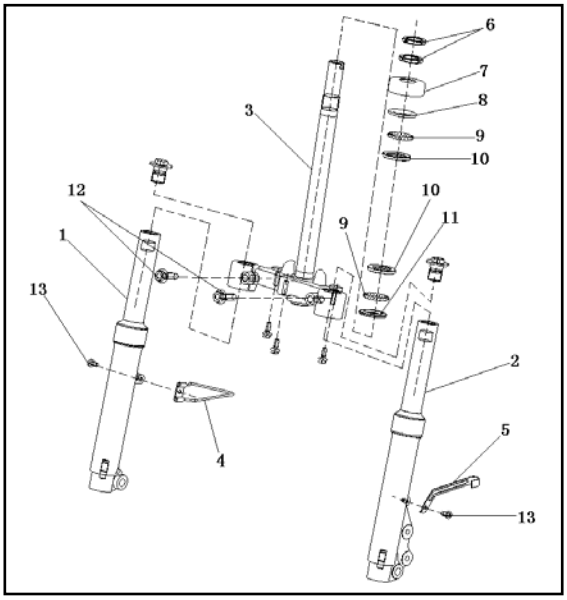

Tools:

Fixing bolt spanner for the steering handle weld assembly.

Fixing nut spanner.

Special disassembly tool for bearing cup.

*** Note:**

The opening of the body guard shall be cleaned with cloth.

The upper/lower bearing cup shall be dismantled with a special disassembly tool for bearing cup.

7.5.3 Installation

Lubricate the steel cups of the bottom bearing with grease and confirm 21 steel balls.

Do not move the handlebar (to prevent steel balls from falling into the handlebar).

Hold the handlebar; lubricate the steel cups of the top bearing with grease and confirm 21 steel balls.

Lubricate the top seating with grease.

Move the handlebar from side to side to make steel balls contact closely.

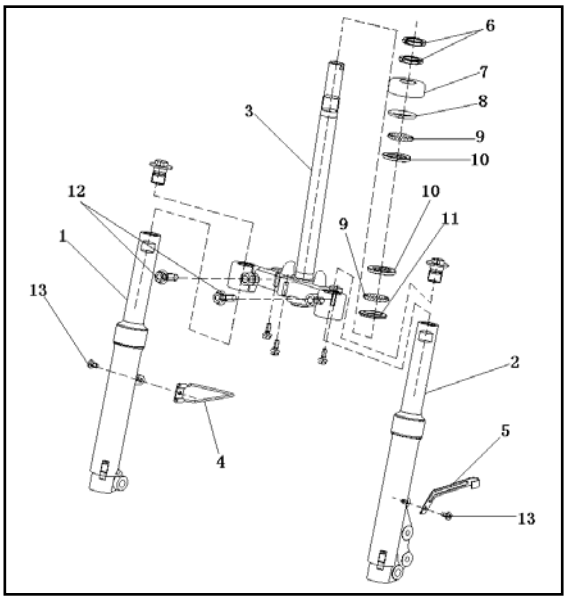

Tools:

Fixing nut spanner.

Ensure the front fork is not loose by left and right movement.

Steps:

Install the left/right absorber assembly.

Install the handlebar.

Install the body guard.

Install the front wheel.

*** Note: for the disassembly and assembly of the front fork , please see P89.**

Rear wheel/rear suspension

A	Torque for fixing nut 5 of the rear wheel: 100-113N·m
B	Torque for mounting bolt 4: 22-29N·m
D	Torque for mounting bolt 14: 37-44N·m
E	I.D. of brake hub (friction limit): 111mm
F	Thickness of brake pad (wear limit): 3.5mm

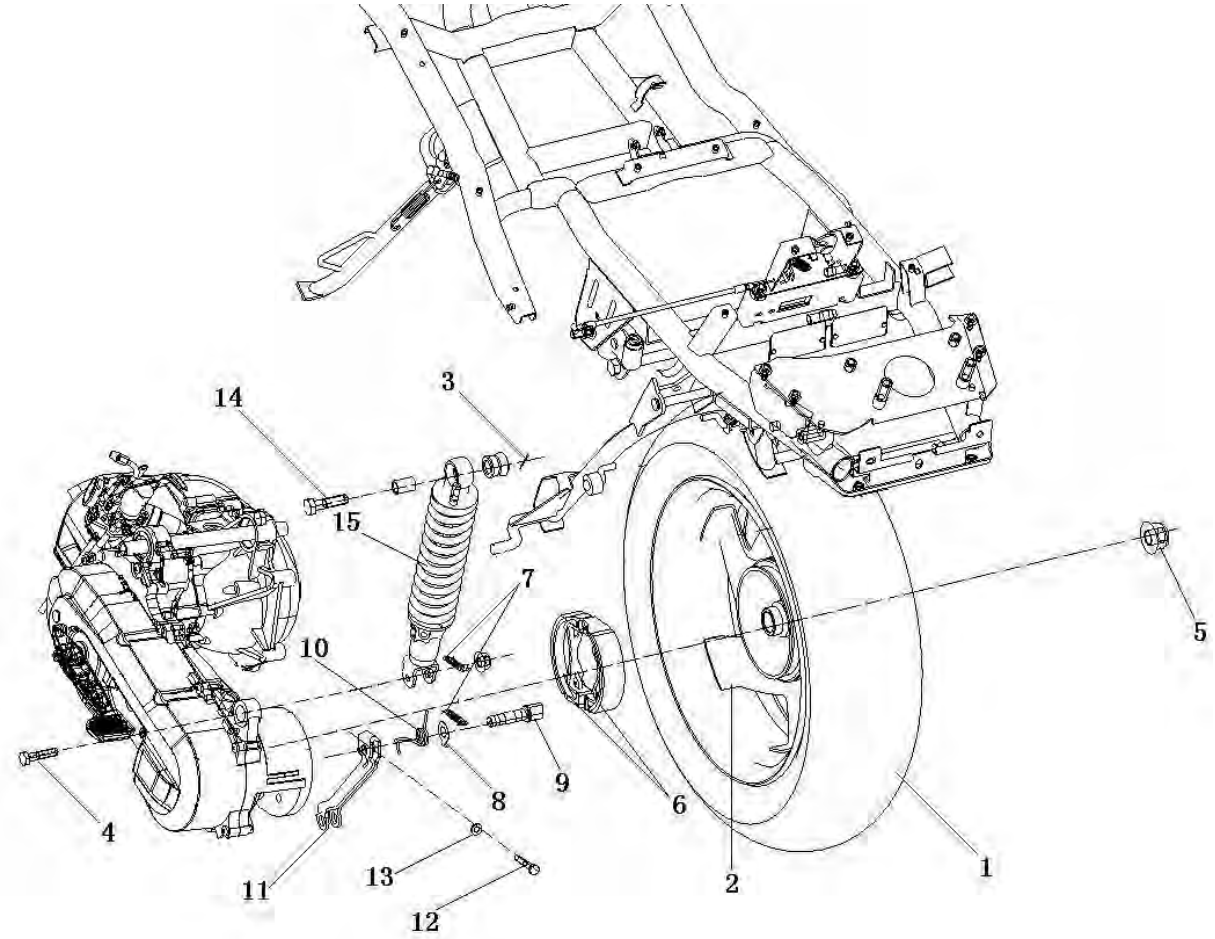

1 outer tire 130/70-12 2 rim 3.50×12 3 cotter pin 4 bolt M8×31 5 nut M16×1.5 6 brake shoe assembly 7 brake shoe spring 8 rear indicator 9 rear brake camshaft 10 rear brake return spring 11 rear brake swing arm 12 rear swing arm mounting bolt 13 o-ring 14 bolt M10×1.25×40 15 rear absorber assembly

Rear wheel

A	Tire size: 130/70-12
B	Rim size: 3.50×12
C	Rim run-out limit:
	Vertically: 2.0mm
	Horizontally: 2.0mm
D	Torque of fixing nut 5 of the rear wheel: 100-113N·m
E	Auth. No. of rear tire: E11 75R 000216

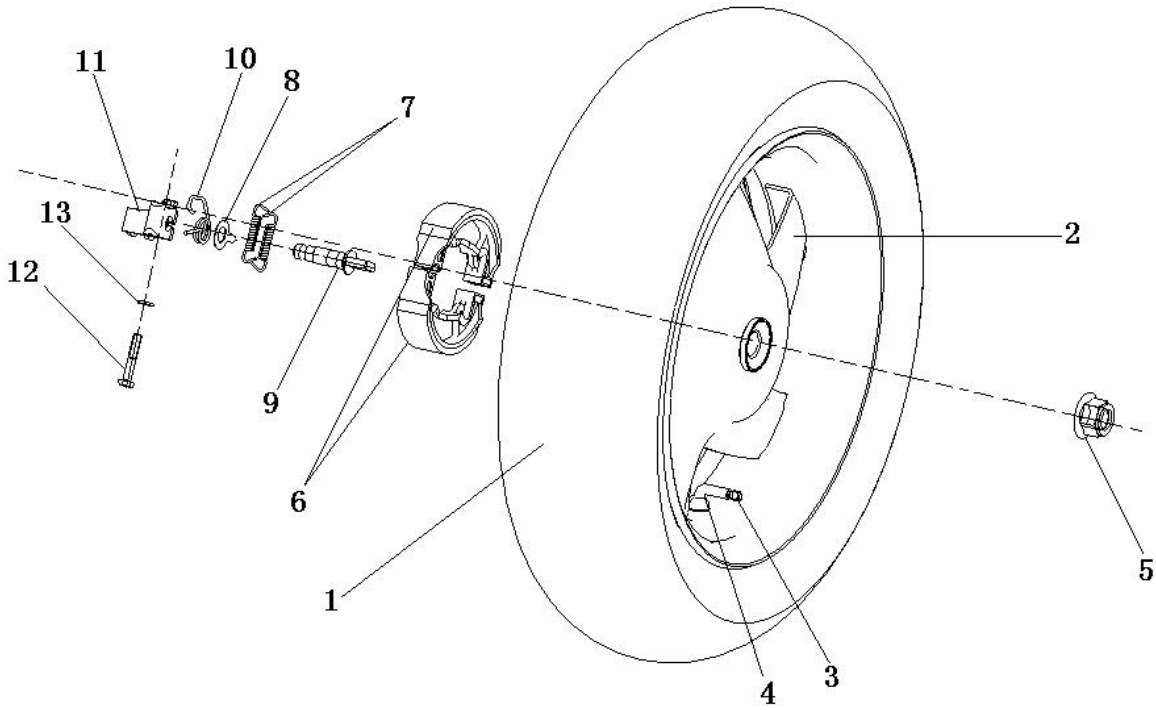

1 outer tire 130/70-12 2 rim 3.50×12 3 valve cap 4 valve 5 nut M16X1.5 6 brake shoe assembly 7 brake shoe spring 8 rear indicator 9 rear brake camshaft 10 rear brake return spring 11 rear brake swing arm assembly 12 rear swing arm mounting bolt 13 O-ring

8. Rear Wheel/Rear Suspension

8.1 Preparing documents

Work Instructions

The surface of the brake drum and brake shoes shall not be stained with oil spots.

Preparing Principles

Item		Standard (mm)	Limit for use (mm)
Rear wheel shimmy	Vertically		2.0
	Horizontally		2.0

Locking torque force

Fixing nuts for the rear wheel 100-113 N·m
Fixing bolts of rear absorber (top) 37 - 44 N·m
Fixing bolts of rear absorber (bottom) 22 - 29 N·m

8.2 Failure diagnosis

8.2.1ear wheel shimmy

Deformed rim.
Tire failure.
Rear wheel not fixed.
Low tire pressure.

8.2.2 Too soft absorber

Elastic fatigue of spring

8.3 Rear wheel

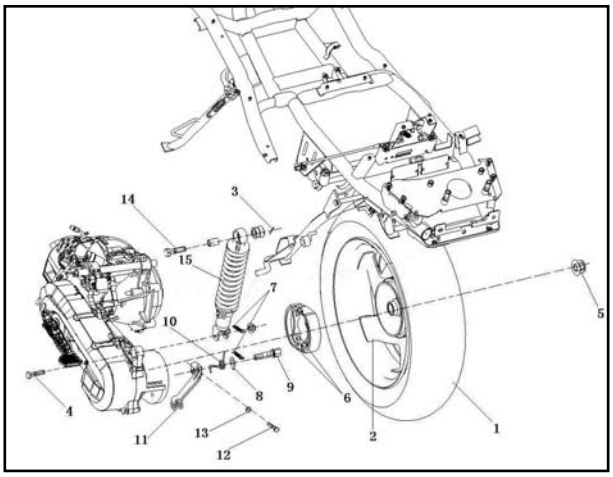

8.3.1 Disassembly

Remove the muffler assembly.
Remove the rear inner fender.
Remove fixing nuts of the rear wheel spindle.
Remove the rear wheel.

8.3.2 Check

8.3.2.1 Check rim shimmy

Rotate the wheel by manual and measure the eccentricity ratio with a dial indicator.

Limit for use:

Vertically: replacement when beyond 2.0mm

Horizontally: replacement when beyond 2.0mm

When the rear wheel shimmy exceeds the limit, the rear wheel bearing is loose, which causes shimmy. Check and replace the rear wheel bearings.

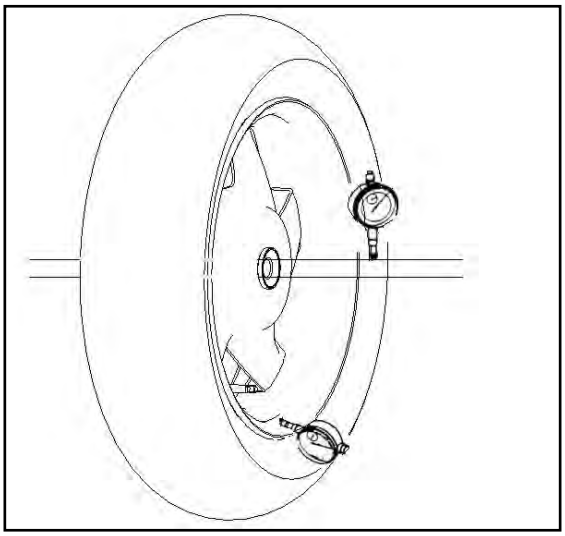

8.3.3 Installation

Install the rear wheel in reverse order and lock nuts.

Fixing nuts for the rear wheel

Torque force: 100-113 N·m

FACT 50 4T rear wheel

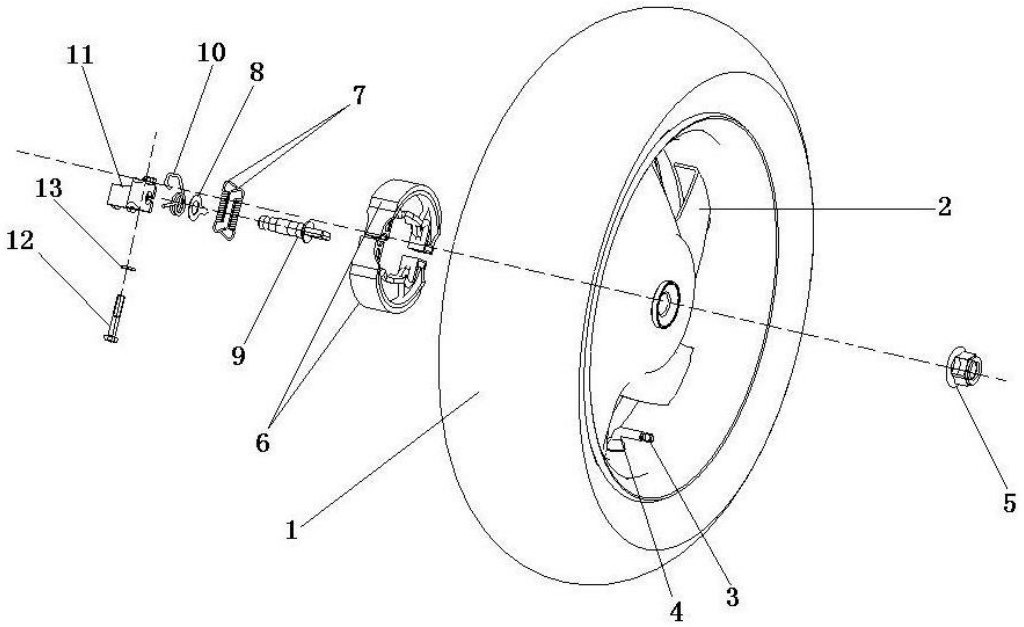

8.4 Rear absorber

8.4.1 Disassembly

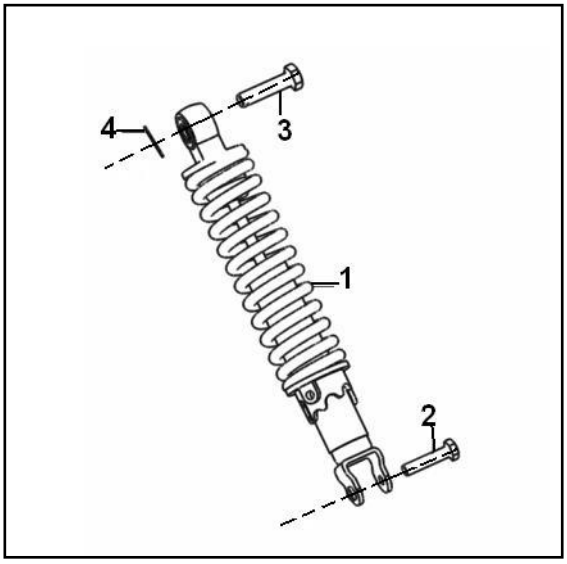

Remove the seat and the rear left/right guard.

Remove the rear storage box, rear rack assembly and rear fender.

Remove fixing bolts of the rear absorber.

Remove the rear absorber.

8.4.2 Installation

Installation of the rear absorber:

Torque force:

Upper fixing nut: 37-44 N·m

Lower fixing nut:22-29 N·m

Install the rear absorber.

Install the rear storage box, rear rack assembly and rear fender.

Install the seat and the rear left/right guard.

Fuel tank/seat

A	Note: for the disassembly of the fuel tank, turn the fuel switch to “OFF”.
B	Torque for bolt 9:5-9N•m
D	Torque for bolt10: 5-9N•m

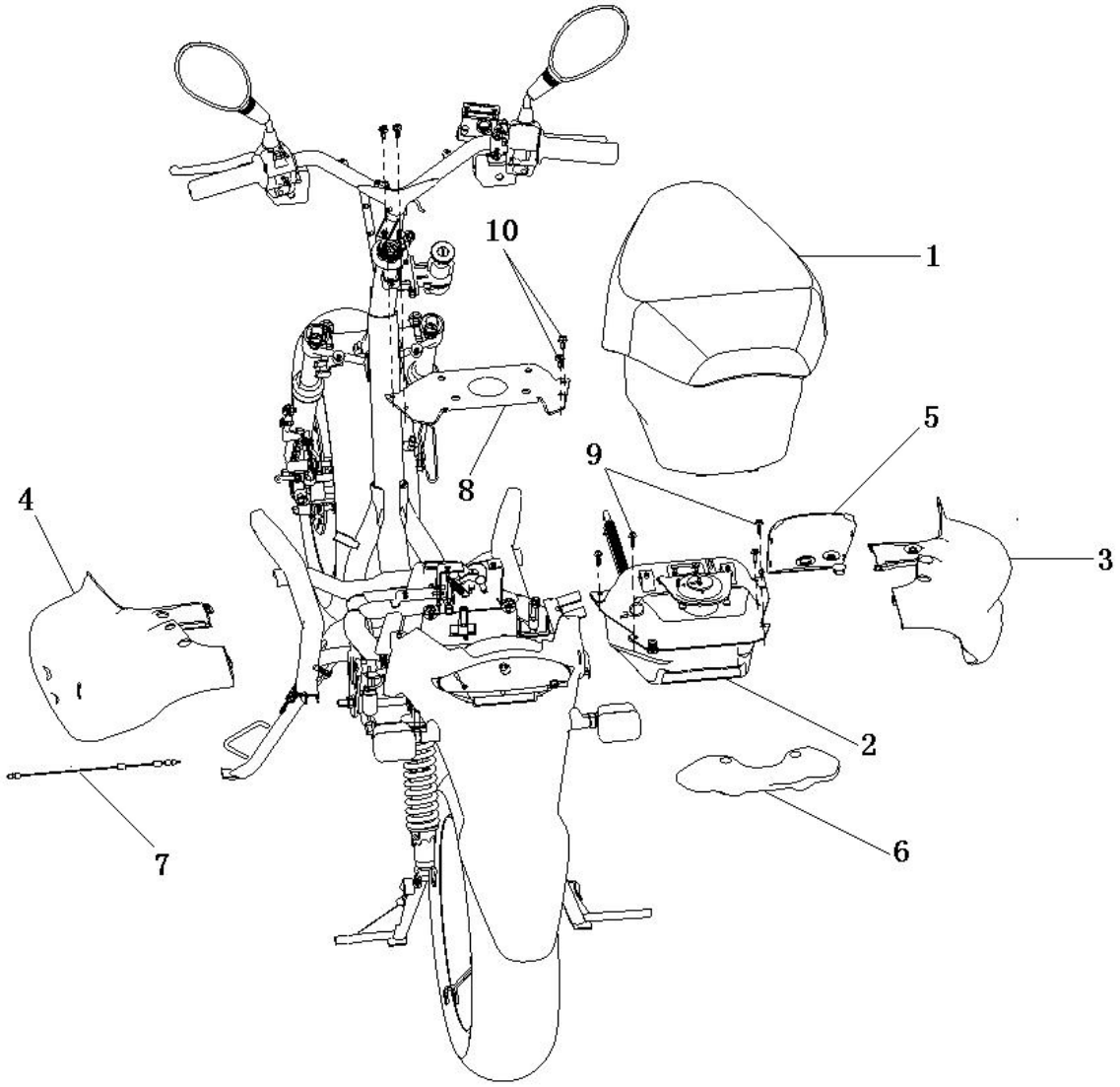

1 seat assembly 2 fuel tank assembly 3 right cover sheet 4 left cover sheet 5 front cover of helmet box 6 rear storage box rack 7 seat steel rope 8 rear storage box rack holder 9 bolt M6×16 10 bolt M6×12

Fuel tank

A	Gasoline capacity: 6.0±0.2L
B	Torque for bolt 2: 5-9N·m
D	Note: for the disassembly of the fuel tank, turn the fuel switch to “OFF”.

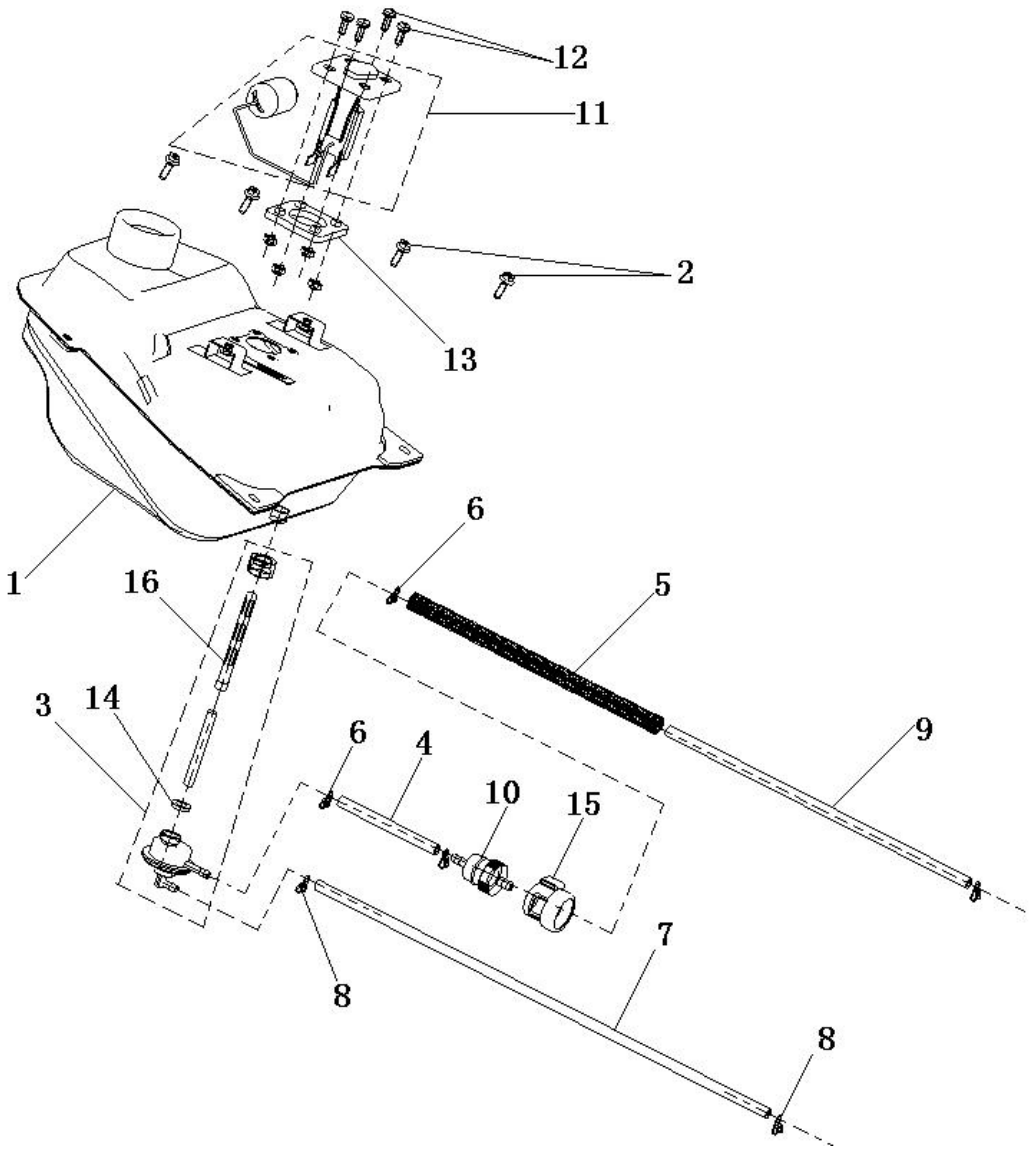

1 tank assembly 2 bolt M6×16 3 fuel tank switch assembly 4 fuel tube 1 φ4.5Xφ8.5X80mm 5 thermal-isolating spring 6 clampφ8 7 vacuum tube φ4Xφ8X360mm 8 clamp φ7 9 fuel tube 2 φ4.5Xφ8.5X250mm 10 filter assembly 11 oil level sensor 12 bolt M5×16 13 oil level sensor gasket 14 sealing rubber 15 filter jacket 16 filter element

Seat

A	Torque for bolt 4: 5-9N·m
B	Torque for bolt 6: 5-9N·m

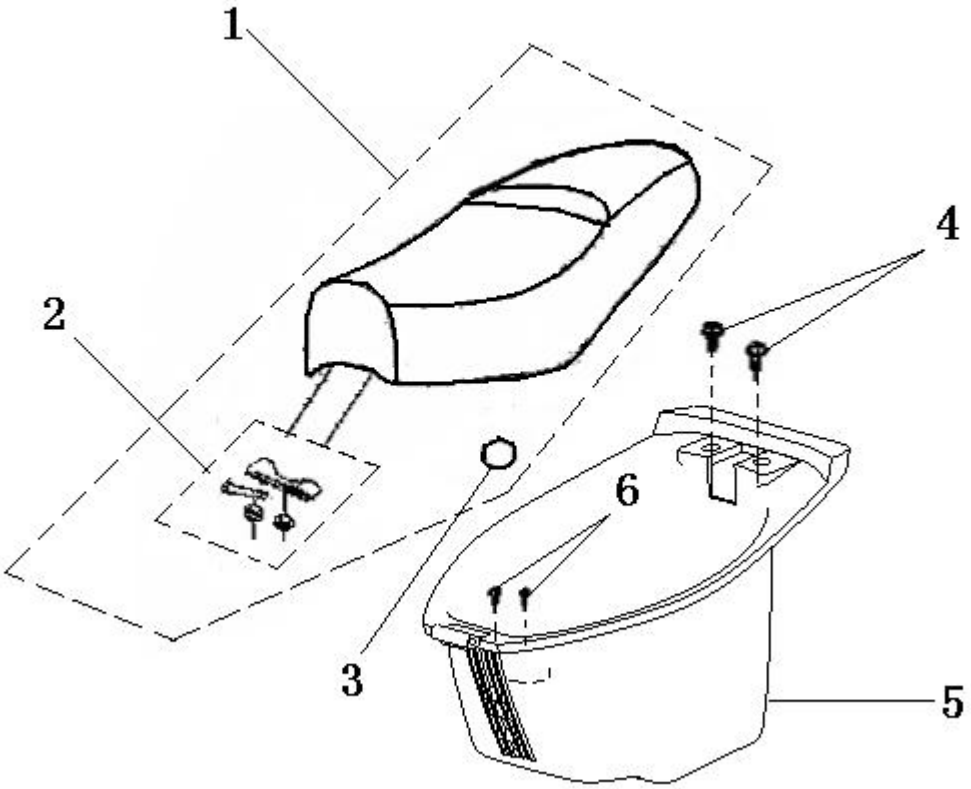

1 seat assembly 2 seat hinge assembly 3 O ring 84.4×3.1 4 boss bolt M6×14 5 helmet box
6 assembling bolt M6×20

9.Fuel Tank/Seat

9.1 Preparing documents

Work Instructions

It shall be dismantled far from fire sources.
Turn the fuel switch to “OFF” when the fuel tank is dismantled.
Tighten all the bolts and screws to the required torque value for assembly.
After assembly, check whether all the parts are correctly installed and operated.

Preparing Principles

Item	Standard	Limit for use
Gasoline tank capacity	6.0±0.2L	/

Tightening torque force

Fixing screws for the rear rack 22-29 N·m
Fixing bolts for the fuel tank 5 - 9 N·m
Fixing bolts for the helmet box 5 - 9 N·m

9.2 Failure diagnosis

Decreasing gasoline

Natural consumption of gasoline
Leakage of gasoline

9.3 Fuel tank/seat

9.3.1 Disassembly

Open the seat.
Remove (four) fixing bolts of the seat.
Remove the machine oil pot guard.
Remove the machine oil pot.
Remove the seat and the helmet box (1).

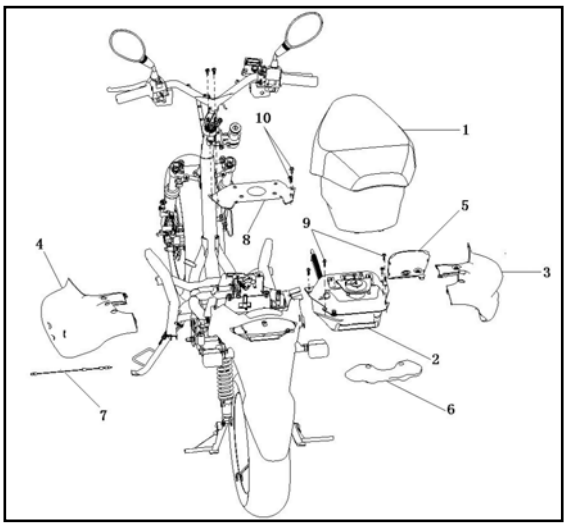

Remove the rear storage box rack.
Remove the rear left/right guard assembly.
Remove the rear rack and helmet box.
Remove the rear rack holder.

Turn the fuel switch to “OFF”.
Disconnect the fuel hose.
Remove the fuel tank.

Note:
For details, see P101, P102, P103.

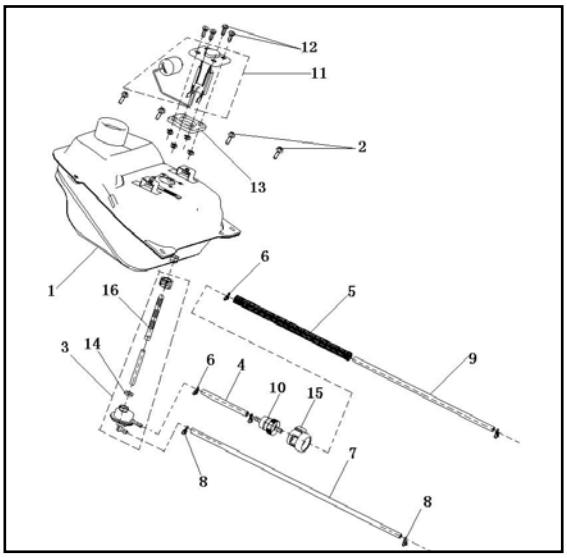

9.3.1 Installation

Install it in reverse order.
Torque force for mounting:

Fixing screws for the rear rack	**22-29 N·m**
Fixing bolts for the fuel tank	**5 - 9 N·m**
Fixing bolts for the helmet box	**5 - 9 N·m**

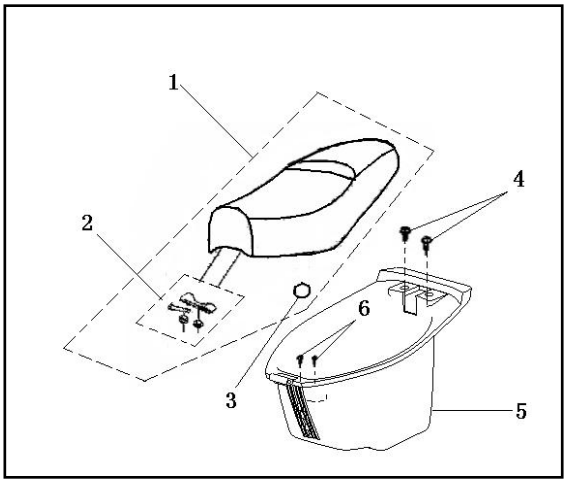

Disassembly and Installation of Engine

A	torque force of engine stationary axis 1: 55-62N·m
B	torque force of bolt 2: 37-44N·m
C	torque force of bolt4: 22-29N·m

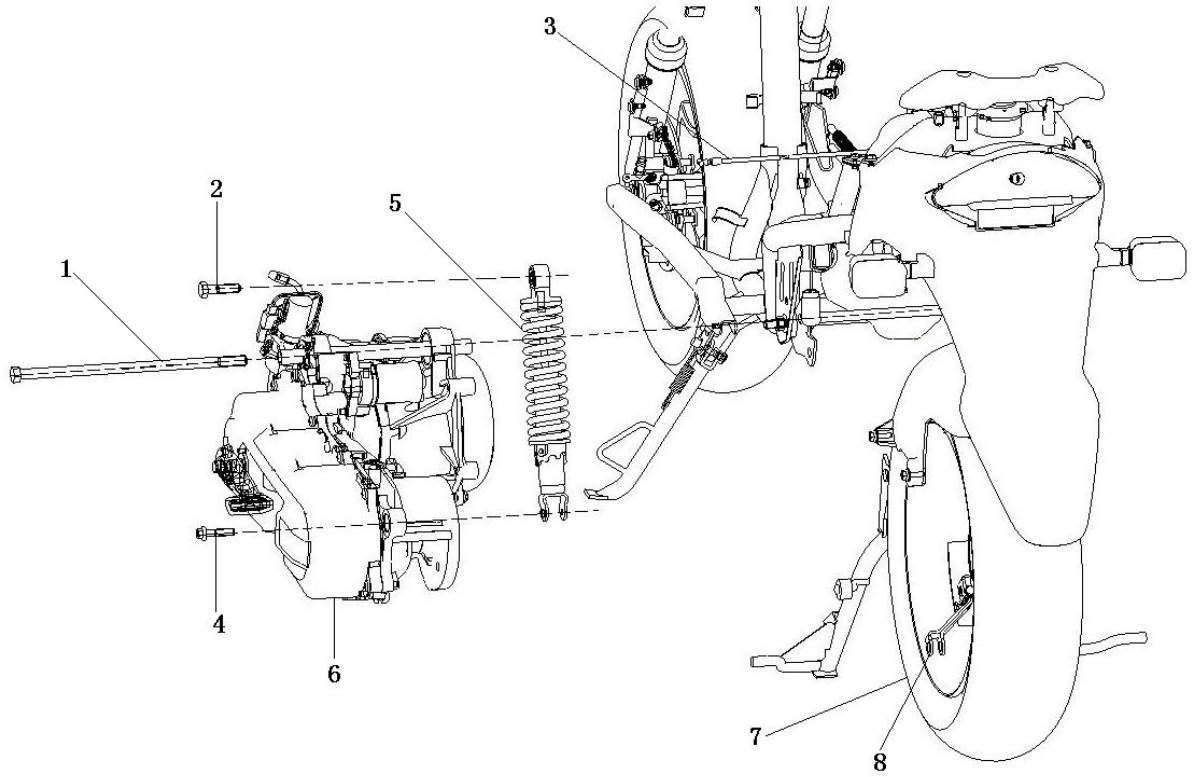

1 engine stationary axis M12×1.25×280 2 bolt M10×1.25×40 3 seat steel rope 4 bolt M8×31 5 rear shock absorber assembly 6 engine assembly 7 rear wheel assembly 8 rear brake rocker arm assembly

10. Disassembly/installation of engine

10.1 Preparing documents

Work Instructions

Make motorcycle not tilt in removing motor.
Remove motor when maintain crankshaft and final drive shaft.
When maintaining magnetogenerator, camshaft, carburetor, driving wheel, clutch, driven wheel and oil pump, the motor can stay at the frame and needs not to be removed.

Preparing Principles

Motor is not only kinetic resource of motorcycle, but also driving part and main rear suspension device. On one hand, the motor with rotating action output by crankshaft, getting slowed by clutch and V shape tape stepless speed variator, can drive rear wheel directly; on the other hand, the motor acts as girder rocker arm.

Locking torque force:

Engine stationary axis 55-62 N·m
Rear shock absorber standing bolt（upper） 37-44 N·m
Rear shock absorber standing bolt（lower） 22-29 N·m

10.2 Failure diagnosis

Swinging motor

Swinging or bended of girder rocker arm
Loose motor driving device
Loose motor suspension bolt

10.3 Disassembly of engine

10.3.1 Disassembly

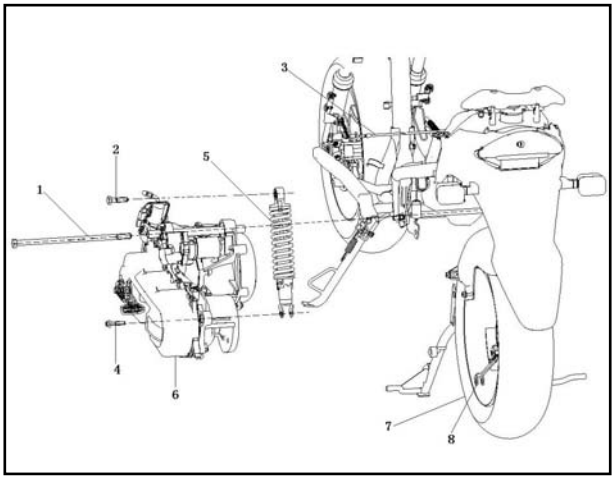

Remove bolt and left crankcase ventilated tube.
Disassembly procedures:
-remove frame cover.
-remove gas filter.
-remove primary cable of ignition coil.
-remove starter motor cable.
-remove fuel tube and vacuum tube.
-remove starter valve 2P connector.
-remove magnetogenerator/ pulser 3P connector.

Remove bolt and underground cable of motorcycle.

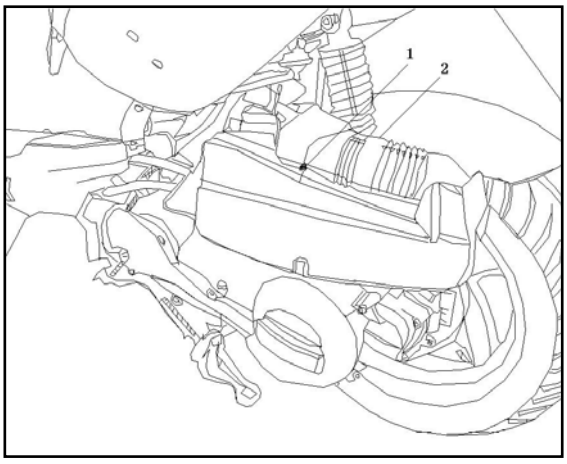

remove rear shock absorber standing bolt (upper).
Remove the right suspension bolt and gasket.
Remove the left suspension bolt.
Remove the engine from the frame.

10.3.2 Engine suspension standing clamp

10.3.2.1 Disassembly

Remove spark plug cap.
Remove fuel tube and vacuum tube from carburetor.
Remove engine suspension bolt/nut and engine assembly.

Remove bolt and ignition coil.
remove bolt, fuel tube and vacuum tube.

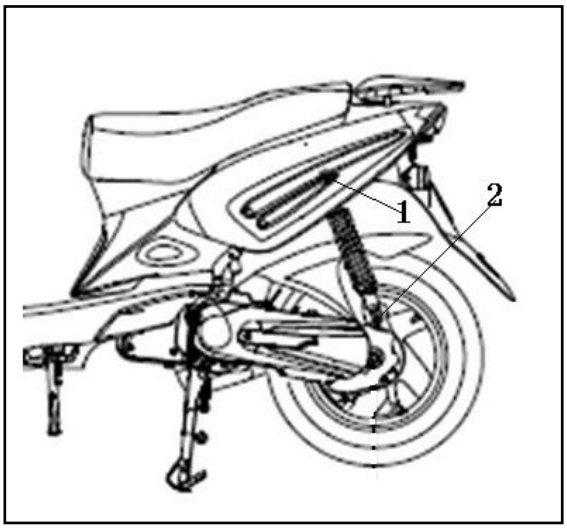

10.3.2.2 Inspection

Check whether the shock absorber of engint suspension is abraded or damaged.
Check whether the rubber ring of shock absorber is abraded or damaged.

10.3.2.3 Installaiton

Install bolt and ignition coil.
Install fuel tube, vacuum tube and bolt.

Install spark plug cap.

Connect carburetor fuel tube and vacuum tube.

Connect the engine suspension assembly to engine assembly.

Install bolt and nut of engine suspension temporarily.

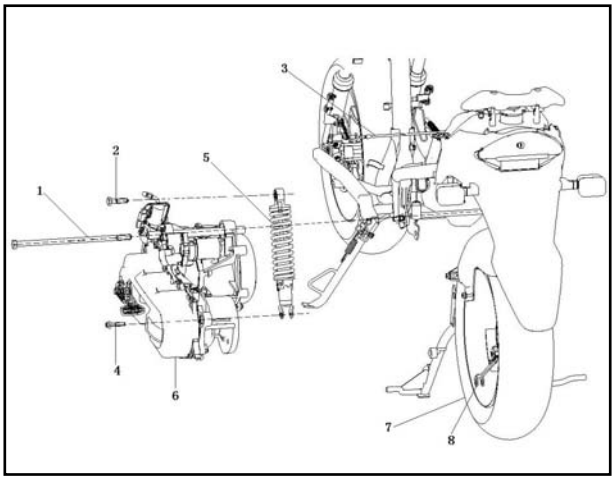

10.3.3 Installation

Install according to reversed procedures of “disassembly”.

Note:

For details, see P106.

Torsion value of installation:

engine stationary axle 55-62 N·m

rear shock absorber standing bolt (upper) 37-44 N·m

rear shock absorber standing bolt (lower) 22-29 N·m

Inspection and Maintenance of Engine

Table of Torque Force of Engine Fasteners

Name of fastening parts and fasteners	Tightening torque（N·m）
Fan cowl locking bolt	10-12
Cylinder cover locking nut	15-18
Spark plug	22-25
Air intake pipe locking bolt	10-12
Cooling fan blade locking screw	10-12
Flywheel locking bolt	45-50
Locking screw for the magnetor stator coil	10-12
Right crankcase locking bolt	10-12
Bearing plate locking bolt	10-12
Double-end stud for cylinder double-head	15-18
Motor fixing bolt	10-12
Locking screw for the crankcase left cover shade	10-12
Locking bolt for the crankcase left cover	10-12
Locking nut for the drive wheel	40-45
Locking nut for the driven wheel	40-45
Locking nut for the driven wheel clutch	55-60
Locking screw for the overrunning clutch outer ring	10-12
Locking screw for the electric starter idler plate	10-12
Locking bolt for the gearbox cover	10-12
Locking bolt for the oil drain hole of the left crankcase	18-22
Locking nut for the locating pin shaft of left crankcase	18-22

Lubricating System

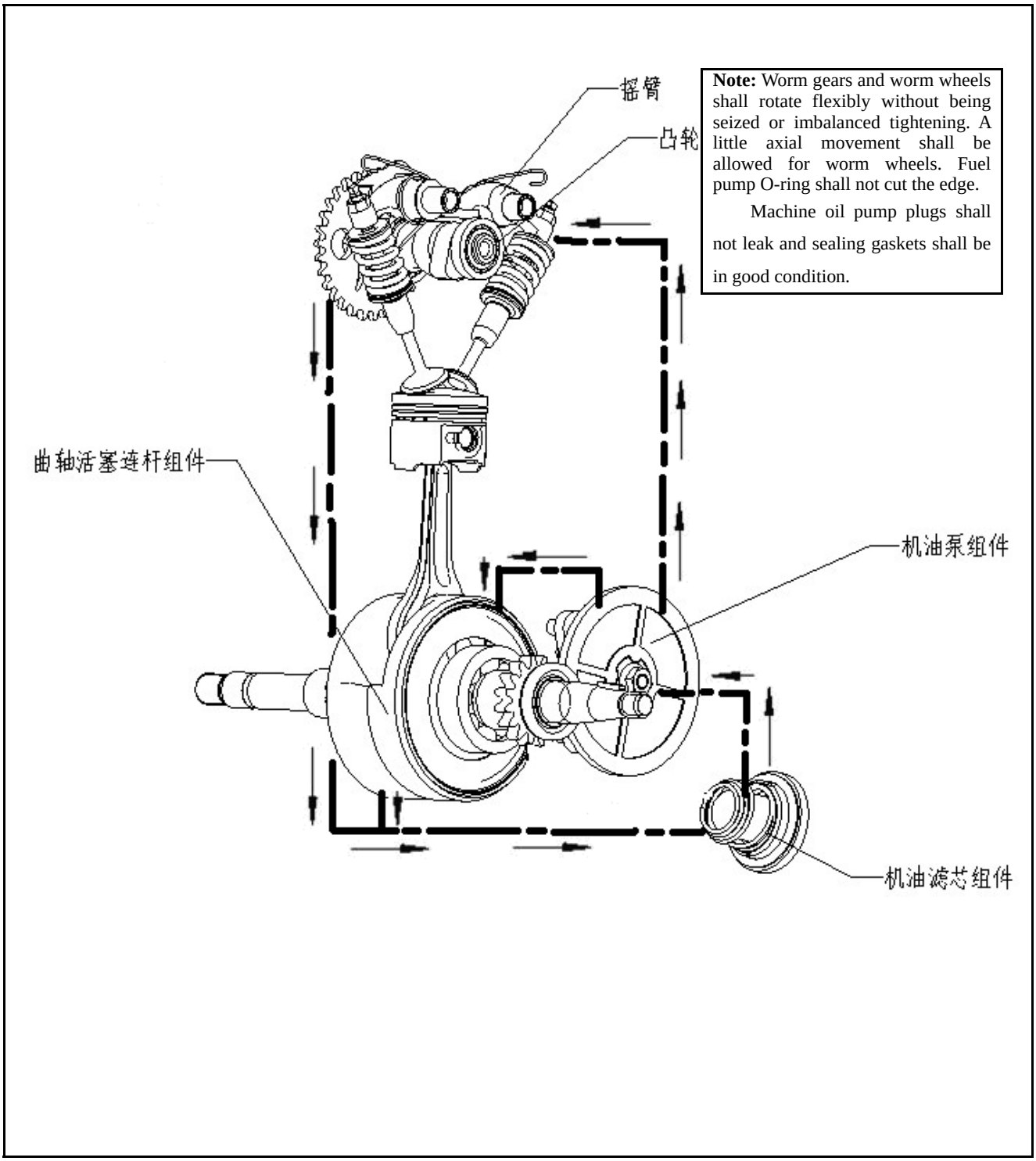

Note: Worm gears and worm wheels shall rotate flexibly without being seized or imbalanced tightening. A little axial movement shall be allowed for worm wheels. Fuel pump O-ring shall not cut the edge.

Machine oil pump plugs shall not leak and sealing gaskets shall be in good condition.

摇臂---rocker arm 凸轮---camshaft 曲轴活塞连杆组件---crankshaft piston connecting rod assembly
机油泵组件---fuel pump assembly 机油滤芯组件--- fuel filter element assembly

10. Lubricating System

10.1 Preparing documents

Work Instructions

Worm gears and worm wheels shall rotate flexibly without being seized or imbalanced tightening. A little axial movement shall be allowed for worm wheels. Fuel pump O-ring shall not cut the edge.
Machine oil pump plugs shall not leak and sealing gaskets shall be in good condition.
After installation, remove bolt 3 during engine trial running, and lock it when machine oil runs out continuously.

Function of the lubricating system: the lubricating system of the engine is to provide lubricating oil to the frictional surface of each part, which transforms dry friction into liquid friction between lubricating oil particles and also reduces abrasion of parts. It also cools components with high thermal load, absorbs shock from bearings and other parts, reduces noise, increases sealing between piston ring and cylinder wall, and cleans and removes particles in the surface.

10.2 Failure diagnosis

Decreasing fuel	Burnt engine
Natural consumption of fuel	No fuel or low fuel pressure
Fuel leakage	Blocked fuel pipes
Abrasive or incorrectly installed piston ring	No fuel used

10.3 Fuel pump

10.3.1 Disassembly

Loosen the bolt and remove the fan cowl assembly.

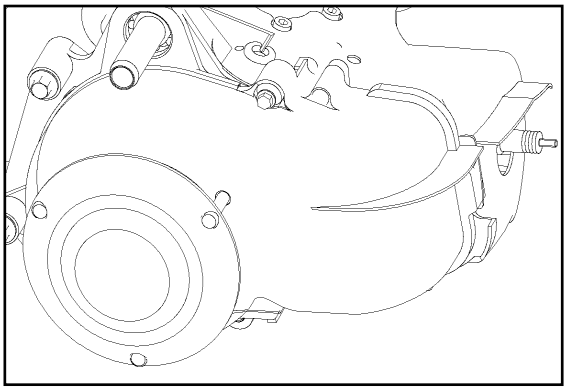

Loosen fan screws and remove the fan.

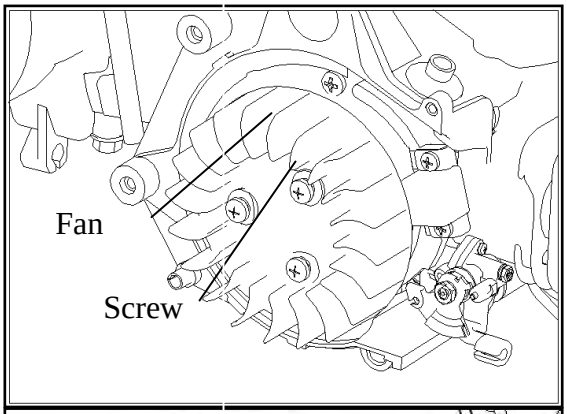

Remove the right cover.

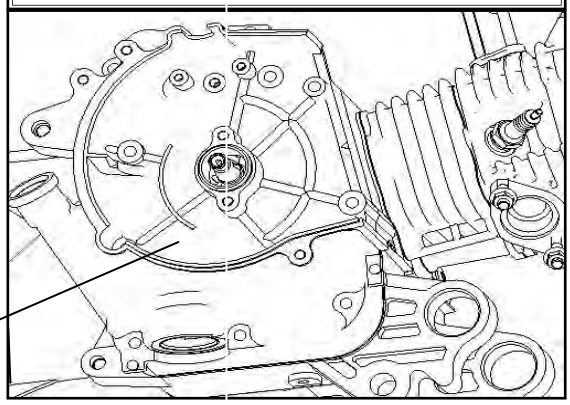

Remove the worm wheel from the crank and also the fuel pump assembly.

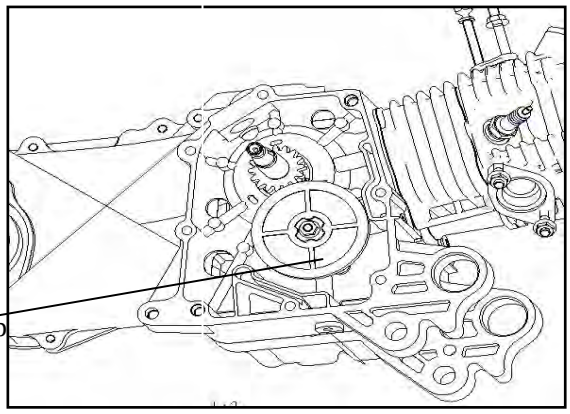

Remove screw, take down the fuel pump base, and disassemble the fuel pump.

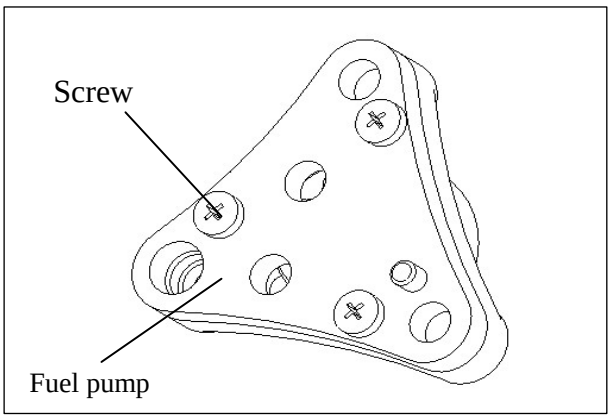

Check the radial clearance between inner and outer rotors.
Limit for use: 0.19mm。

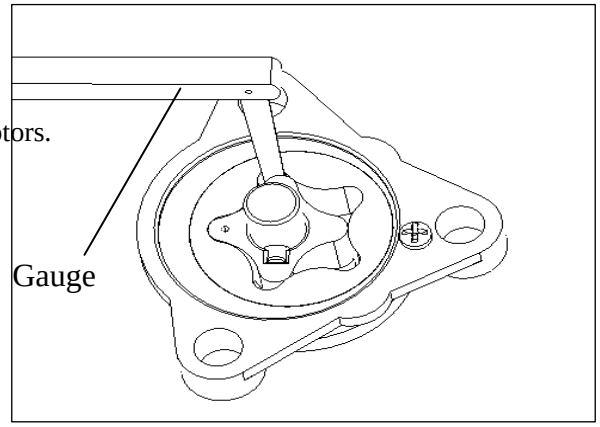

Check the clearance between outer rotor and fuel pump base.
Limit for use: 0.21mm。

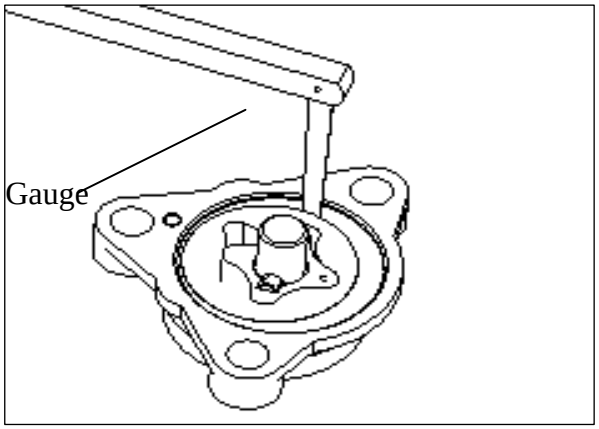

Check the end clearance of rotors.
Limit for use: 0.11mm.

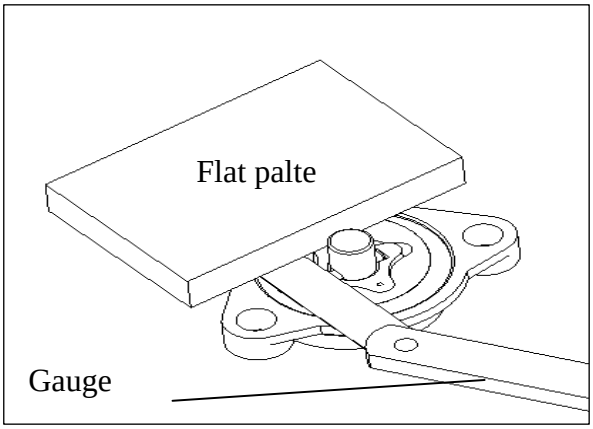

Assembly of fuel pump

As shown below

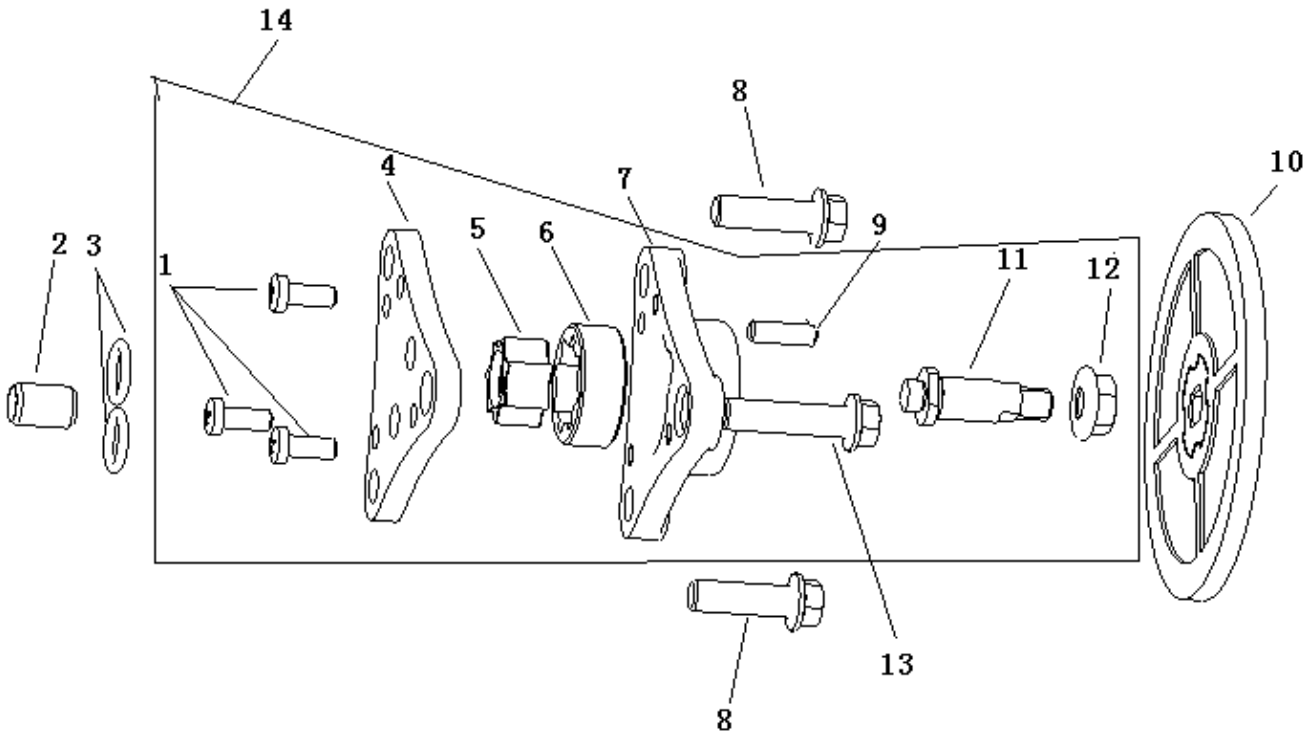

1. cross recessed small pan head screws2. locating pin 3. O ring 4. fuel pump base 5. inner rotor 6. outer rotor 7. fuel pump body 8. hexagon flange bolt 9. round pin 10. fuel pump gear assembly 11. fuel pump shaft 12. hexagon flange nut 13. hexagon flange bolt 14. fuel pump sub assembly

10.3.2 Installaiton

Install it in reverse order.

Measure the outer diameter of the plunder.

Limit for use: 2.61mm。

Carburetor

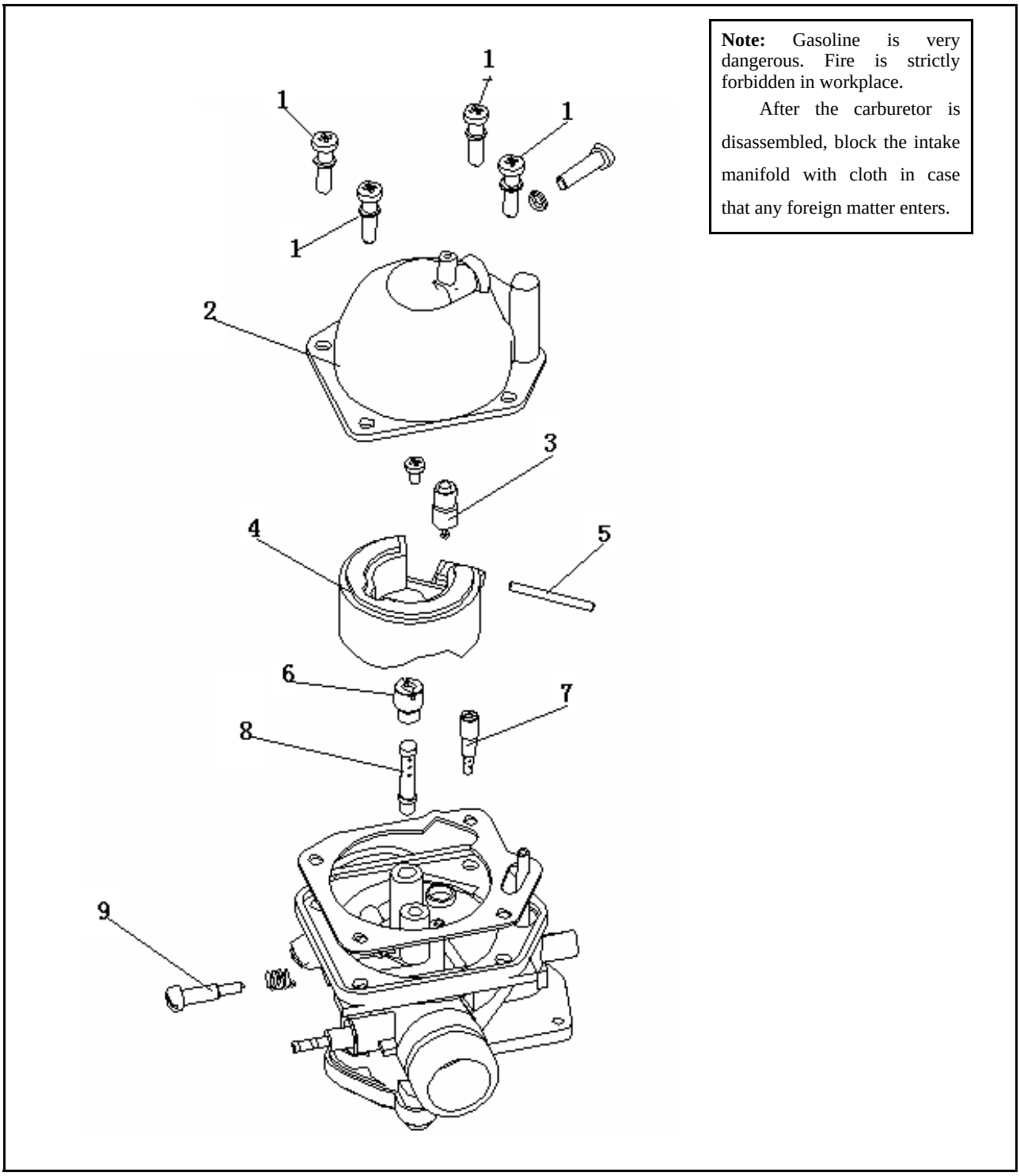

Note: Gasoline is very dangerous. Fire is strictly forbidden in workplace.

After the carburetor is disassembled, block the intake manifold with cloth in case that any foreign matter enters.

1. screw 2. float chamber 3. needle valve assembly 4. float 5. float pin 6. main metering jet 7. idling jet 8. main foam pipe 9. idle adjusting screw

11.Carburetor

11.1 Preparing documents

Work Instructions

·Gasoline is very dangerous. Fire is strictly forbidden in workplace.
·Pay special attention to spark.
·Forcibly pulling and bending of wires is not allowed. Distortion and damage will affect their function.
·After the carburetor is disassembled, block the intake manifold with cloth in case that any foreign matter enters.
·If not used for more than one month, gasoline in the float chamber of the carburetor shall be drained out since it may block the idling jet after deterioration, which affects idle speed.

Carburetor functions: Carburetor is a critical component in the fuel supply system of the engine; its work condition directly affects the stability as well as the dynamic and economic indicators of the engine. It atomizes certain amount of gasoline into small oil drops, and evenly mixes it with different quantities of air to form combustible vaporific mixed gas of different concentration upon different working conditions of the engine. The mixed gas will be supplied to the engine to ensure continuous and normal operation.

Preparing Principles

Unit: mm

Item	Standard value
Main jet	47.5
Main metering jet	50#
Idle metering jet	22.5#
Oil needle	B05-2

11.2 Failure diagnosis

Abnormal startup

Difficulty in startup, flameout after startup, unstable idle speed

No fuel in the carburetor
Blocked carburetor
Blocked oil filter
Too dense or dilute mixed gas
Blocked oil pipe
Secondary air suction into the air intake system
Adhesive needle valve
Idle speed maladjustment
Oil level maladjustment
Oil volume maladjustment
Blocked idle speed system or electric enrichment valve

Too much fuel in the engine

Too dilute mixed gas

Oil spilling
Blocked oil jet
Secondary air suction into the fuel system
Blocked needle valve
Fuel deterioration
Low oil level
Abnormal enrichment valve
Blocked fuel system
Blocked idle speed system or choke system
Abnormal plunger
Secondary air suction into the air intake system

Too dense mixed gas

Interrupted spark at acceleration

Abnormal enrichment valve
Too dilute mixed gas
Abnormal needle valve
Over high oil level
Oil spilling from the carburetor
Blocked air channel
Dirty air filter

11.3 Carburetor disassembly

11.3.1 Disassembly

Turn fuel switch to "OFF".
Remove the oil inlet pipe and loosen the throttle cable.
Remove the plug of the oil drain pipe and discharge fuel in the float chamber into another box.
Remove the connector of electric enrichment valve.
Loosen the screws of carburetor to the engine connector and the air filter connector; remove the carburetor between two connectors.

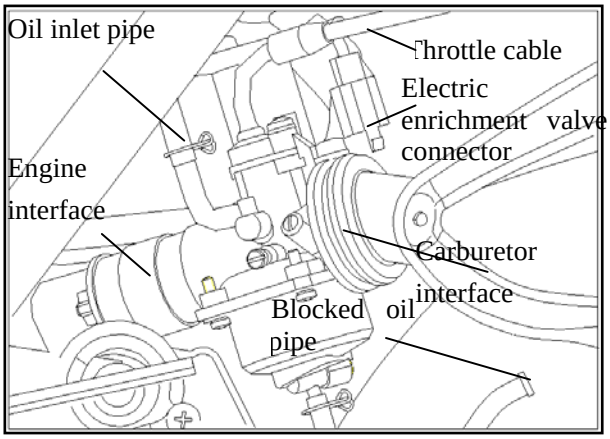

11.3.2 Carburetor breakdown

Loose screws of the electric enrichment valve and remove the electric enrichment valve assembly.

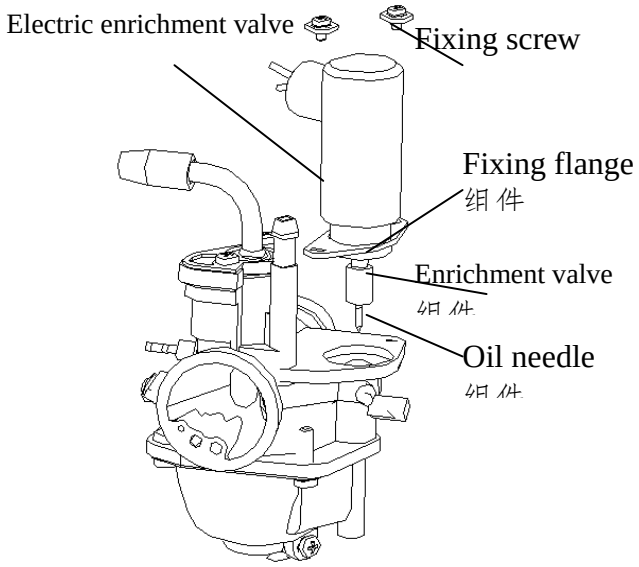

Check abrasion of electric enrichment valve and oil needle.
If it is severe, replace the electric enrichment valve assembly.

Loose screw and remove upper cover.
Remove spring and plunger assembly.

Check abrasion of plunger.
Replace it if abraded.

Check abrasion of oil needle.
Replace it if abraded.

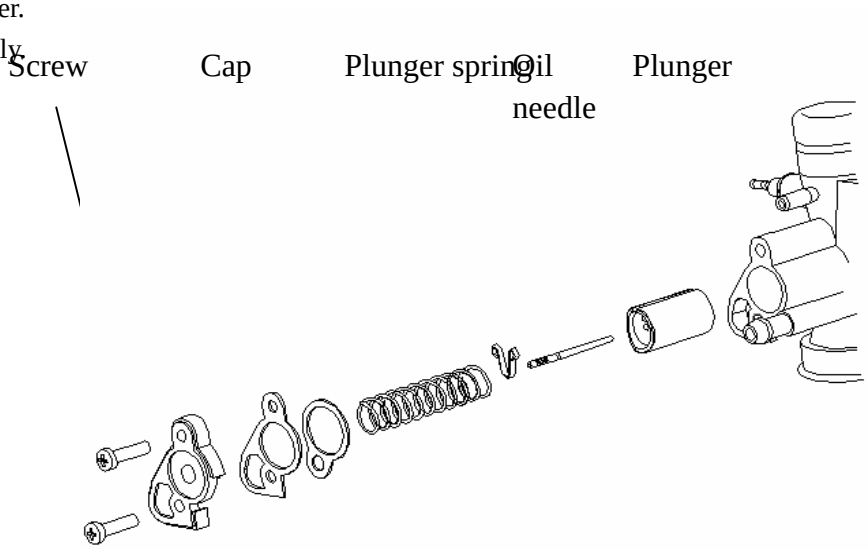

Loosen screws and remove the float chamber.
Remove the float assembly, float pin and needle valve assembly.

11.3.3 Check

Check whether the needle valve assembly, needle valve seat and float assembly are abrasive or damaged.

Replace any abrasive or damaged needle valve core.
Replace the carburetor body if the needle valve seat is abrasive.
Replace any abrasive float tongue.
Check whether the carburetor oil needle is abrasive or damaged. If yes, replace it and also the main jet.
Check whether the idle metering jet, main metering jet and main jet are abrasive, damaged or stained. If yes, replace it.
Replace any abrasive plunger.
Clean any stained carburetor or fuel pipes according to instructions.

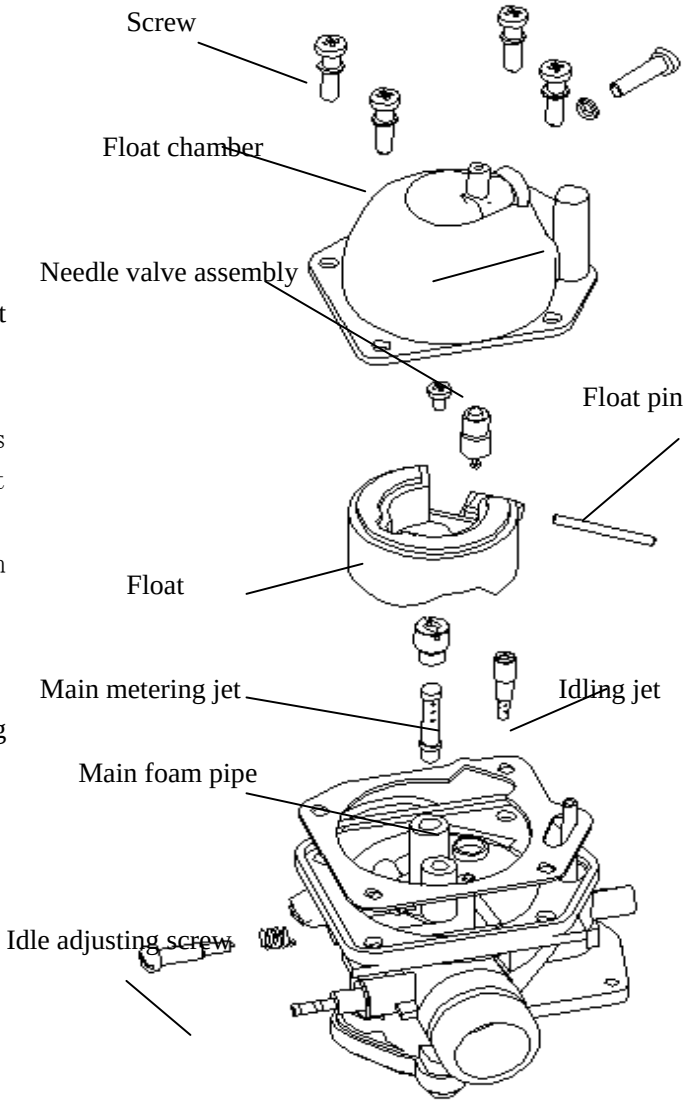

11.4 Installation and adjustment

Assemble or install it in reverse order.

Carburetor adjustment

Note: the idle adjusting screw has been adjusted for the carburetor in factory, which needs no adjustment usually. In disassembly, record the rotation number for installation.

Start and warm up for about 3 minutes to make the engine run at normal driving temperature.

Adjust the idle adjusting screw to make the engine run at 1800rpm;

Tighten the mixture adjusting screw to the extreme with moderate force;

Then the engine flames out (if not, check whether the air filter connecter is leaked, or screws are tightened or air filter inlet is blocked);

Retreat the mixture adjusting screw by one circle;

Restart and adjust the idle adjusting screw to reach 2000-2500rpm;

Adjust the mixture adjusting screw (counter-clockwise) slowly until the engine reaches the maximum speed

(retreat the screw by 2 circles to the maximum);
Readjust the idle adjusting screw to lower the engine speed to 1800±100rpm;
Pull the throttle to speed up for several times and check whether the idle speed is steady;
Test exhaust and compare it with standard.

Cylinder cover

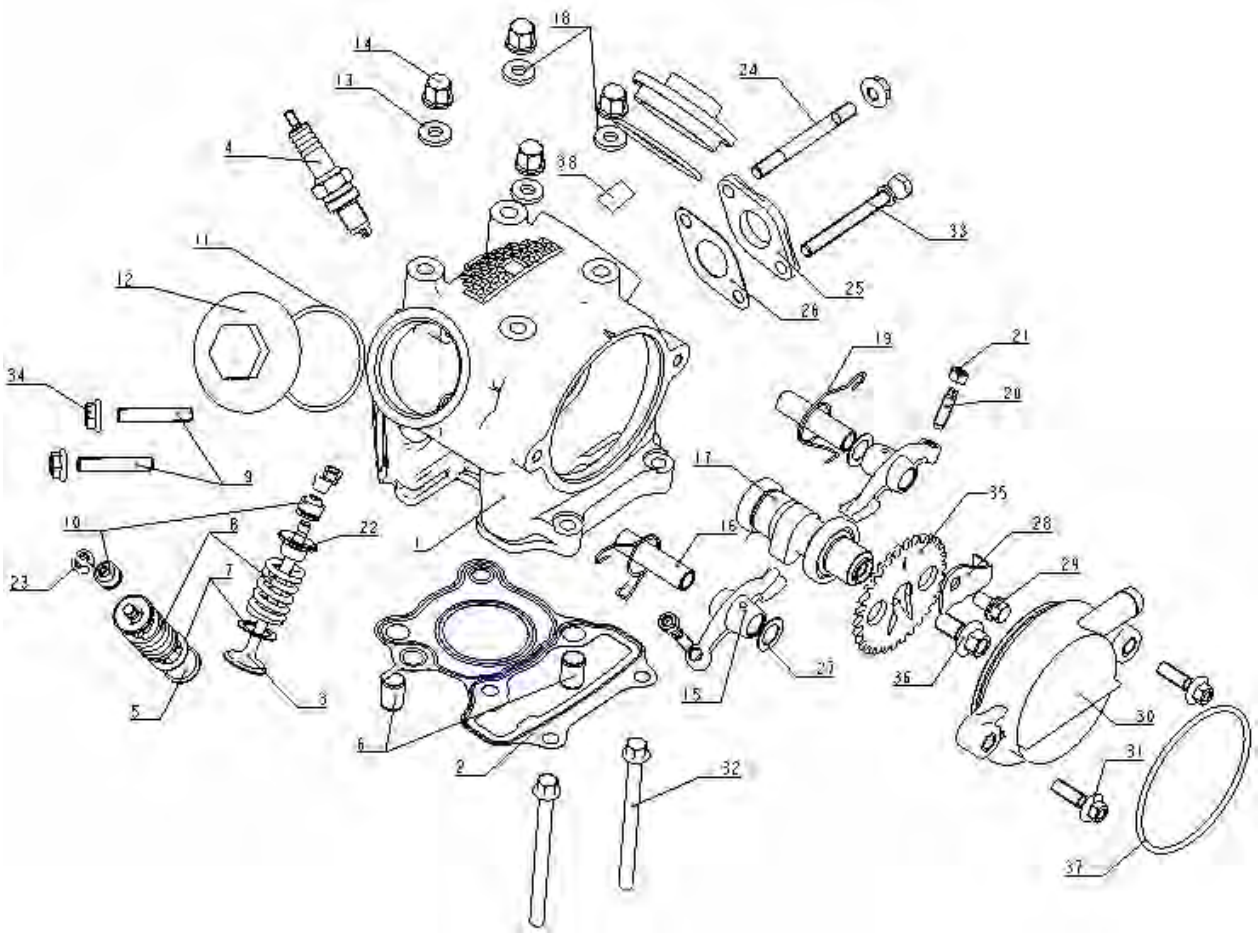

Note: The cylinder cover bears large bolt pretension to ensure sealing between the cylinder cover and the cylinder body.

Pretension: 50Nm

1 cylinder cover assembly 2 cylinder cover gasket 3 intake valve 4 spark plug 5 exhaust valve 6 locating pin（Φ10×14）7 valve spring gasket 8 valve spring 9 exhaust double end stud 10 valve oil seal assembly 11 O ring（40×2.65） 12 valve cover 13 gasket 14 acorn nut 15 valve rocker 16 rockshaft 17 camshaft assembly 18 washer 19 rocker spring 20 tappet adjusting screw 21 adjusting screw hold-down nut 22 valve spring cup 23 valve collet 24 intake double end stud 25 carburetor insulator 26 paper washer of carburetor insulator 27adjusting shim on rocker 28camshaft platen 29 bolt M6×10 30 chain wheel cover assembly 31 bolt M6×20 32 bolt M6×80 33 vacuum end bolt 34hexagon flange nut M6 35 camshaft chain wheel 36 bolt M8×16 37 O ring 38 drain plug

12. Cylinder Cover

12.1 Preparing documents

Work Instructions

The cylinder cover bears large bolt pretension to ensure sealing between the cylinder cover and the cylinder body. Pretension: 50Nm.

All components must be cleaned and dried with high-pressure air before check.

Function of the cylinder cover: the cylinder cover is used to seal the cylinder and form the combustion chamber with the piston. It bears HPHT gas, and achieves air intake and exhaust through distribution mechanism.

12.2 Failure diagnosis

When the vehicle is running, there is gas leakage or too high combustion pressure between the cylinder cover and the cylinder body

Cylinder cover gasket is broken.

Bent bottom surface of the cylinder cover.

Too much carbon fouling in the combustion chamber.

12.3 Cylinder cover

12.3.1 Disassembly

Loosen fixing bolts for the fan cowl.

Remove the fan cow.

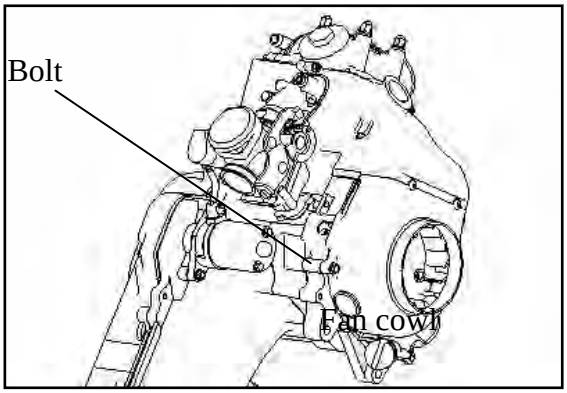

Loosen fixing nuts and spark plug, remove the cylinder cover.

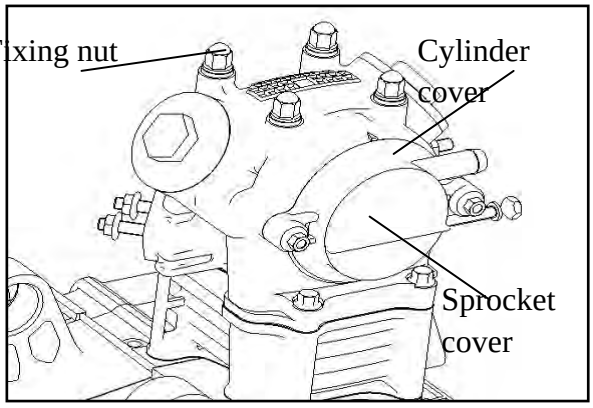

12.4 Cylinder cover check

Check whether cylinder cover is broken.

Check flarness of cylinder cover bottom surface.

Limit for use: 0.04mm。

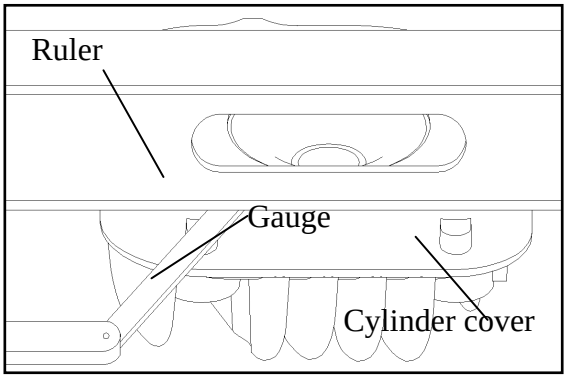

12.5 Installation of cylinder cover

Install it in reverse order.

Cylinder block and piston

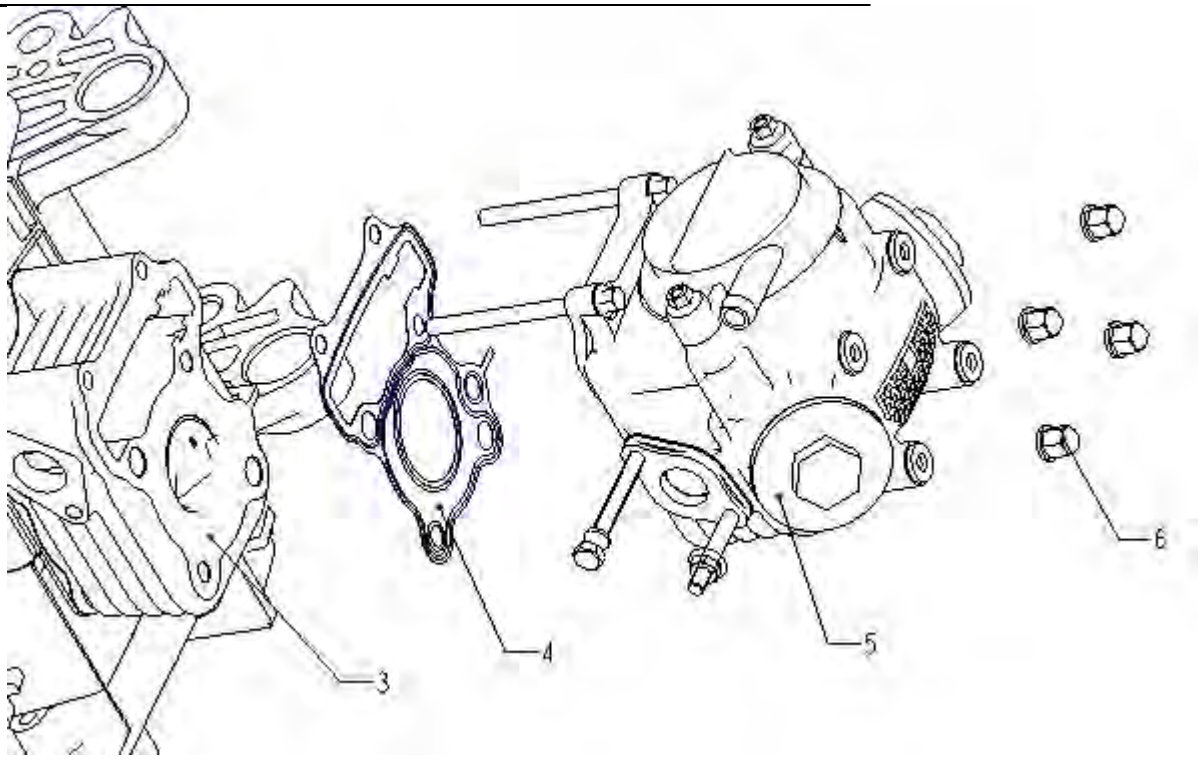

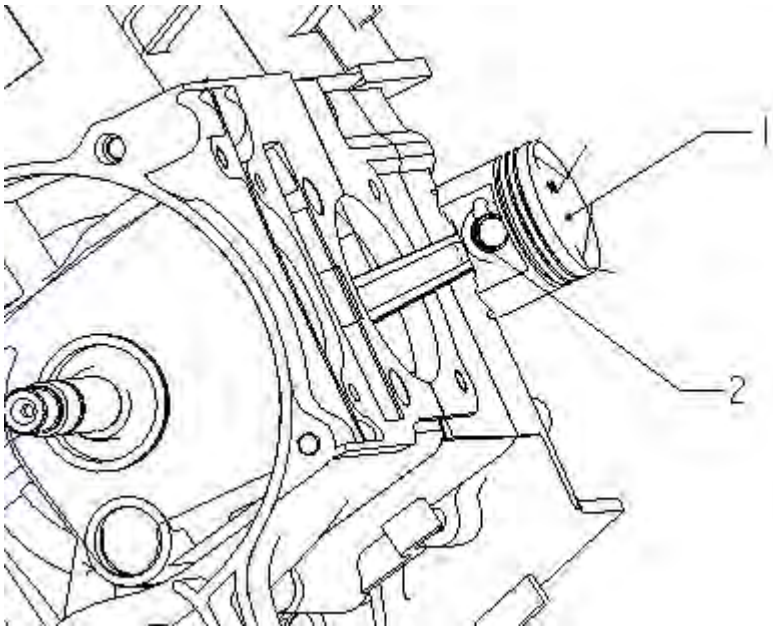

Note: all parts shall be cleaned and blown by high pressure air before check.

1. piston 2. piston pin 3. cylinder block 4. cylinder gasket 5. cylinder cover 6. nut

13.Cylinder Block and Piston

13.1 Preparing documents

Work Instructions

All parts shall be cleaned and blown by high pressure air before check.

Function of the cylinder block: cylinder block provides space for gas compression, combustion and expansion, and also guides piston movement.

It also transfers part of heat energy in the cylinder to cooling medium around.

Function of the piston:

Piston bears pressure arising from mixed gas combustion inside the cylinder and transfers such pressure to the connecting rod for driving the crankshaft.

It forms combustion chamber along with the cylinder cover.

It acts as slide valve for air inlet/stop, periodically compresses fresh mixed gas from the crankcase into the cylinder and discharges exhaust gas after combustion in the cylinder.

Preparing Principles

Unit: mm

Item			Standard	Limit for use
Cylinder	Inner diameter		37-37.01	37.01
	Bending		-	-
	Cylindricity		0.005	0.005
	Flatness		0.03	0.03
	Roundness		-	-
Piston Piston ring	Piston ring groove gap	Top ring	0.02-0.06	0.06
		Ring 2	0.02-0.06	0.06
	Joint gap	Top ring	0.1-0.25	0.25
		Ring 2	0.1-0.25	0.25
	Outer diameter of piston		36.975-36.985	36.975
	Clearance between piston and cylinder		0.02-0.03	0.03
	Inner diameter of piston pin hole		10.002-10.008	10.008
Outer diameter of piston ring			9.994-10	9.994
Clearance between piston pin hole and piston pin			0.002-0.014	0.014
Inner diameter of the smaller end of the connecting rod			14.995-15.006	10.018

13.2 Failure diagnosis

Low compression pressure

Abrasive, burnt or ruptured piston
Abrasive or damaged cylinder or piston
Damaged spacer or crankcase leakage

White smoke from the exhaust pipe

Abrasive or damaged piston ring
Abrasive or damaged cylinder or piston

Over-high compression pressure

Too much carbon deposit in the combustion chamber

Abnormal noise of the piston

Damaged cylinder, piston or piston ring
Abrasive piston pin hole and piston pin

13.3 Cylinder block

13.3.1 Disassembly of the cylinder block

Remove the cylinder cover and then the cylinder block.

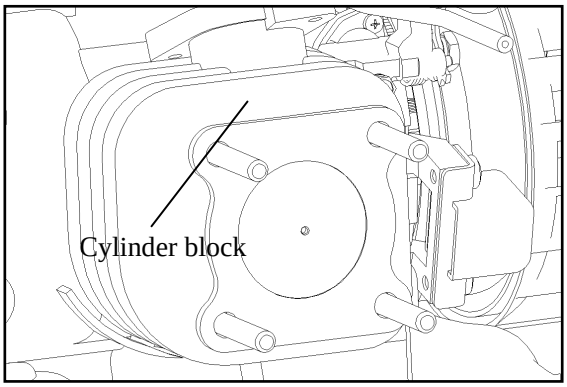

13.3.2 Cylinder block check

Check the abrasion of the inner wall of the cylinder.
If it is serious, replace it.
Check the flatness of the cylinder block.
Limit for use: 0.03

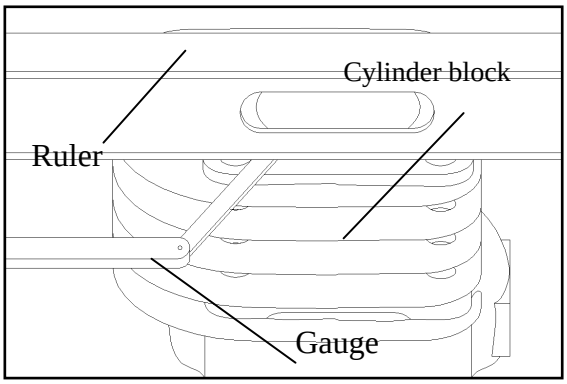

13.4 Piston

13.4.1 Disassembly

Remove the retainer ring of the piston.

Note: during assembly, do not make the retainer ring fall into the crankcase.

Remove the piston pin and the piston.

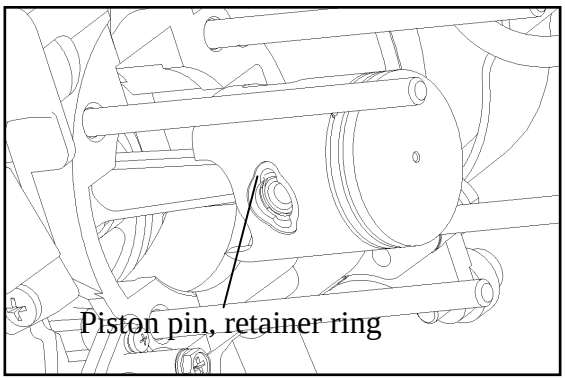

Check the piston, piston pin and piston ring.

Remove the piston ring.

Note: Do not rupture or damage the piston ring.

Eliminate carbon deposit in the groove of the piston ring.

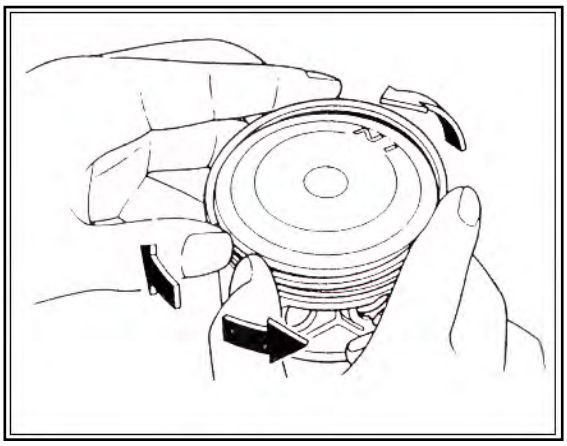

Remove the piston ring, and install each piston ring on the cylinder bottom.

Note: Press the piston ring into the cylinder with piston head.

Measure the joint gap of the piston ring.

Limit for use: 0.25mm.

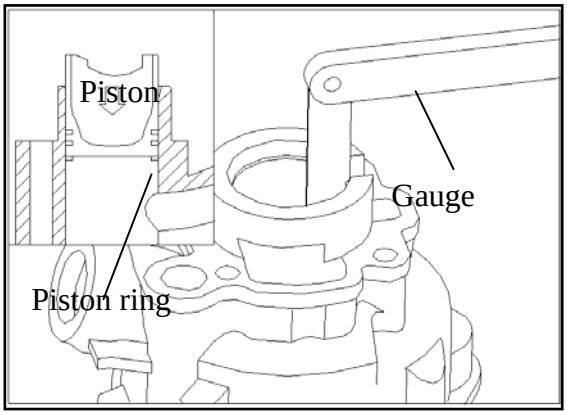

Measure the inner diameter of the piston pin hole.

Limit for use: 10.008mm。

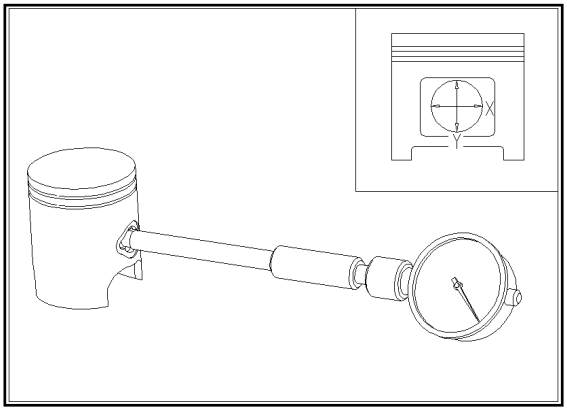

Measure the outer diameter of the piston pin.

Limit for use: 9.94mm。

clearance between the piston pin holr an the piston pin

Limit for use: 0.014mm。

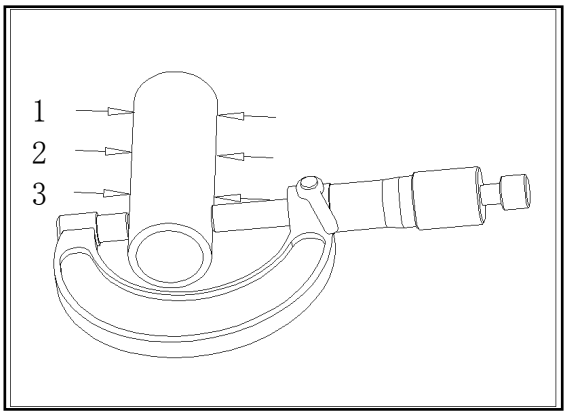

Measure the outer diameter of the piston.

Note: The measuring point shall be at 90°with the piston pin, and at 11.5mm below the piston skirt.

Limit for use: 39.975mm。

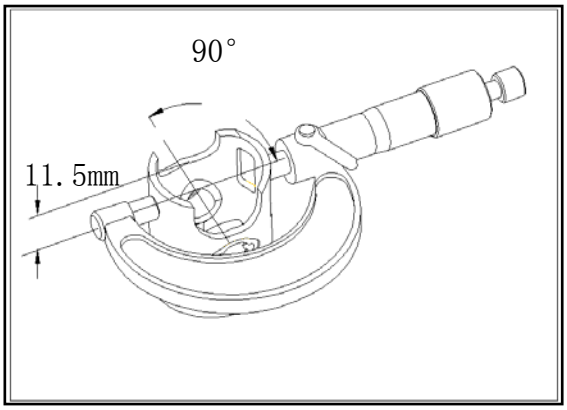

Check whether cylinder inner wall is scratched or abraded.

Note: It is at 90 degree with the piston pin. Measure the inner diameter of the cylinder at the top, middle and bottom points.

Limit for use: 37.01mm。

Measure the maximum clearance between the cylinder and the piston.

Limit for use: 0.03mm。

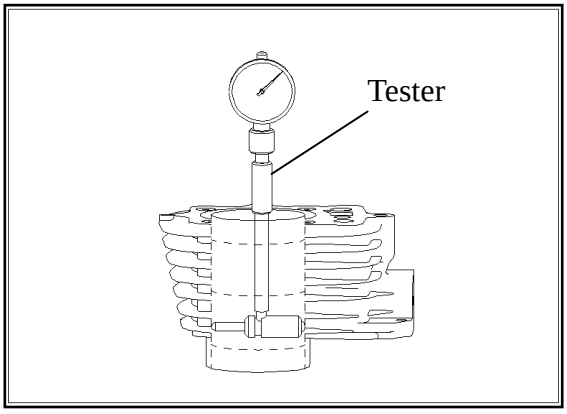

Measure the roundness of the inner wall of the cylinder (inner diameter difference at X direction and Ydirection).

Limit for use: 0.05mm。

Measure the cylindricity of the inner wall of the cylinder (inner diameter difference at the top, middle and bottom points of X direction and Y direction).

Limit for use: 0.05mm。

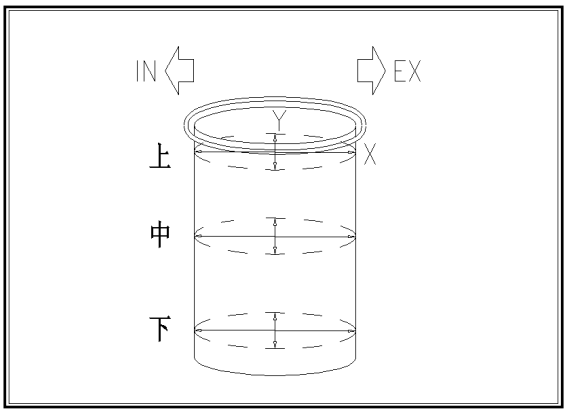

Measure the inner diameter of the smaller end of the connecting rod.

Limit for use: 10.018mm。

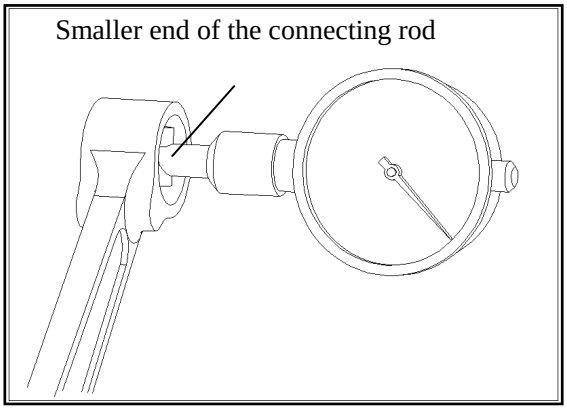

13.4.2 Piston Installation

Install the locating pin.

Apply fuel to each piston ring and pistion. Install the piston ring with inclined side upward.

Note:

Do not scratch the piston or break the piston ring.

After the piston ring is installed, it shall be able to rotate freely in the piston ring groove.

Remove any residual spacer attached to the crankcase.

Note:

Do not make any object fall into the crankcase.

Install the piston, piston pin and retainer ring.

Note:

The notch side of the piston skirt shall face the air intake channel for installation.

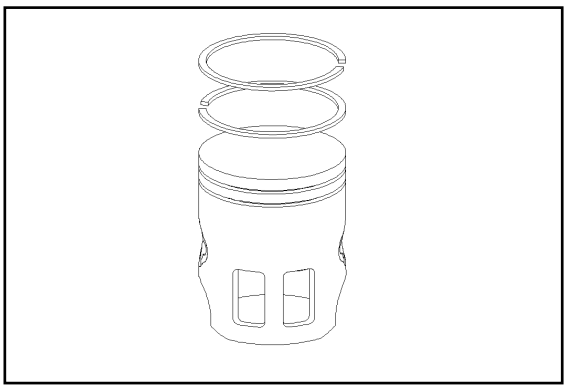

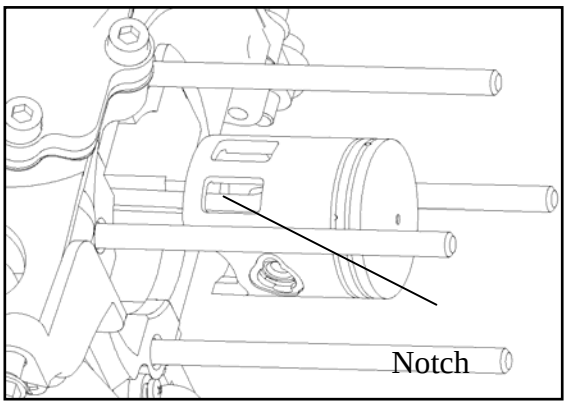

13.5 Piston installation

Install the spacer on the crankcase.

Apply fuel to the inner wall of the cylinder, piston and piston ring.

Carefully install the piston ring into the cylinder.

Note:

Do not damage the piston ring.

Drive face/clutch/driven wheel

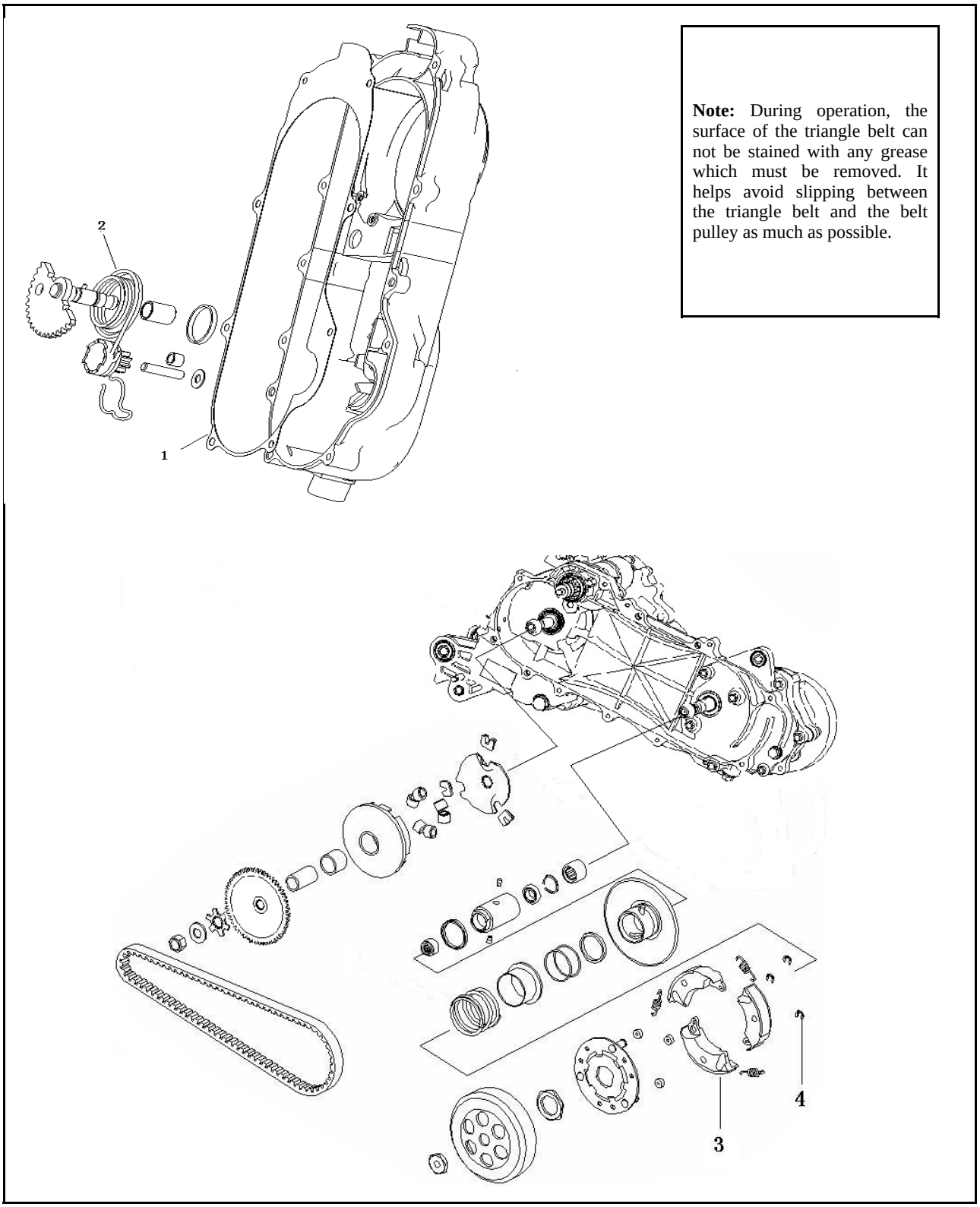

Note: During operation, the surface of the triangle belt can not be stained with any grease which must be removed. It helps avoid slipping between the triangle belt and the belt pulley as much as possible.

1 gasket 2 spring 3 friction plate 4 check ring

Kickstart Mechanism

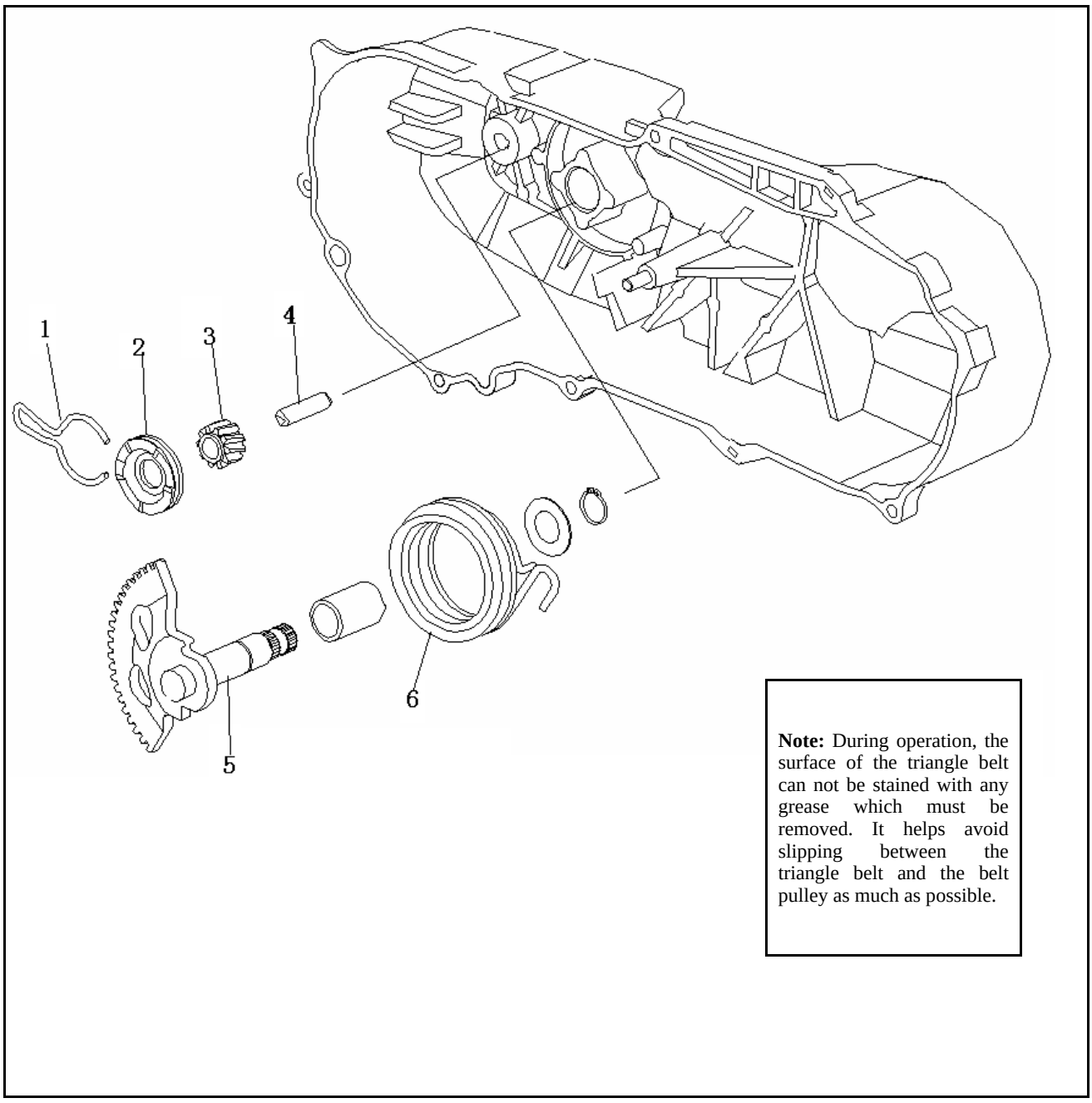

1. snap spring 2. start claw 3. idle gear 4. idler shaft 5. start shaft assembly 6. kickstart shaft spring

14. Drive Face/Clutch/Driven Wheel/Kickstart Mechanism

14.1 Preparing documents

During operation, the surface of the triangle belt cannot be stained with any grease that must be removed. It helps avoid slipping between the triangle belt and the belt pulley as much as possible.

Function: Drive face, clutch and driven wheel constitute stepless transmission. The triangle belt transfers torque between the drive face and the driven wheel.

Preparing Principles Unit: mm

Item	Standard	Limit for use
Inner diameter of right half-driven wheel	20-20.05	20.05
Outer diameter of the sliding sleeve	19.94-19.98	19.94
Width of the triangle belt	18	18
Thickness of the clutch facing	3.5	3.5
Inner diameter of the clutch sleeve	107-107.2	107.2
Free length of the clutch spring	93-97	93
Outer diameter of the bushing on the right half driven wheel	33.95-33.975	33.95
Outer diameter of the sliding sleeve on the left half driven wheel	34.025-34.064	34.064
Outer diameter of the ball	15.8-16.2	15.8

14.2 Failure diagnosis

No run after engine startup Insufficient horsepower Vibration during driving

Abrasive triangle belt Abrasive triangle belt Ruptured clutch facing spring

Damaged driven wheel Distorted clutch spring

Broken or damaged clutch facing Abrasive ball

Ruptured clutch spring Stained surface of the driving pulley

14.3 Left crankcase cover

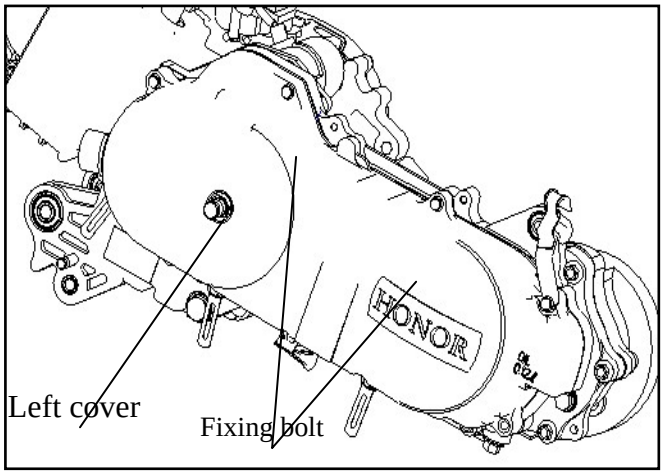

Disassembly

Remove fixing bolts, spacer and locating pin.

Note:
Fixing bolts should be removed in staggered sequence.

Remove the locating pin.

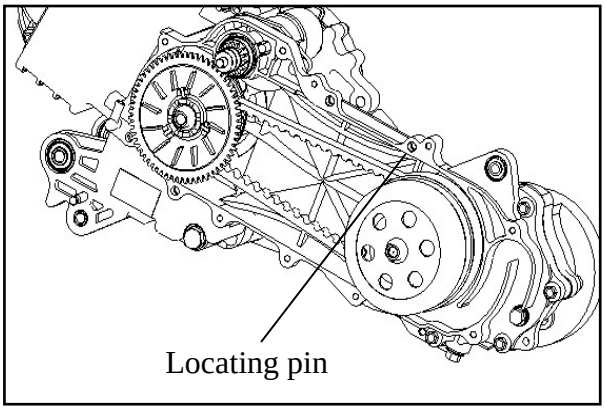

14.4 Drive face

14.4.1 Disassembly

Remove fixing nuts for drive face and the left half-drive face.
Remove the triangle belt from the drive face.

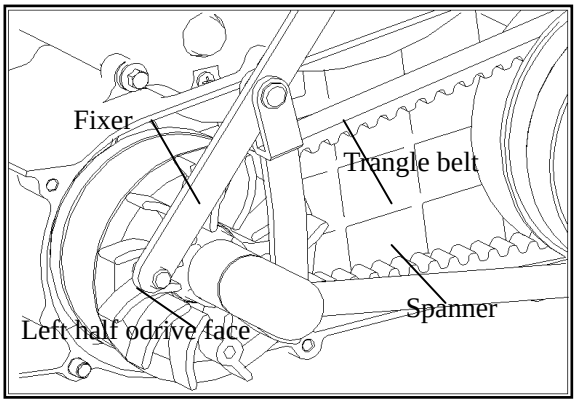

Check whether the triangle belt is cracked and whether rubber or cotton yarn falls down or is abnormally abrasive.
Measure the width of the triangle belt.
Limit for use:18mm。
Note:
Apply original parts from our company for replacement.

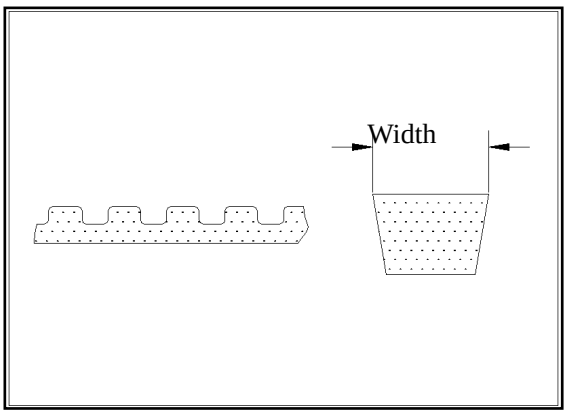

Remove the right half drive wheel assembly

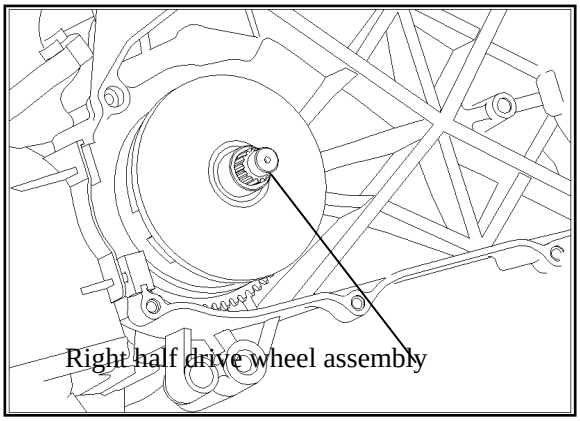

14.4.2 Breakdown of right half drive wheel assembly

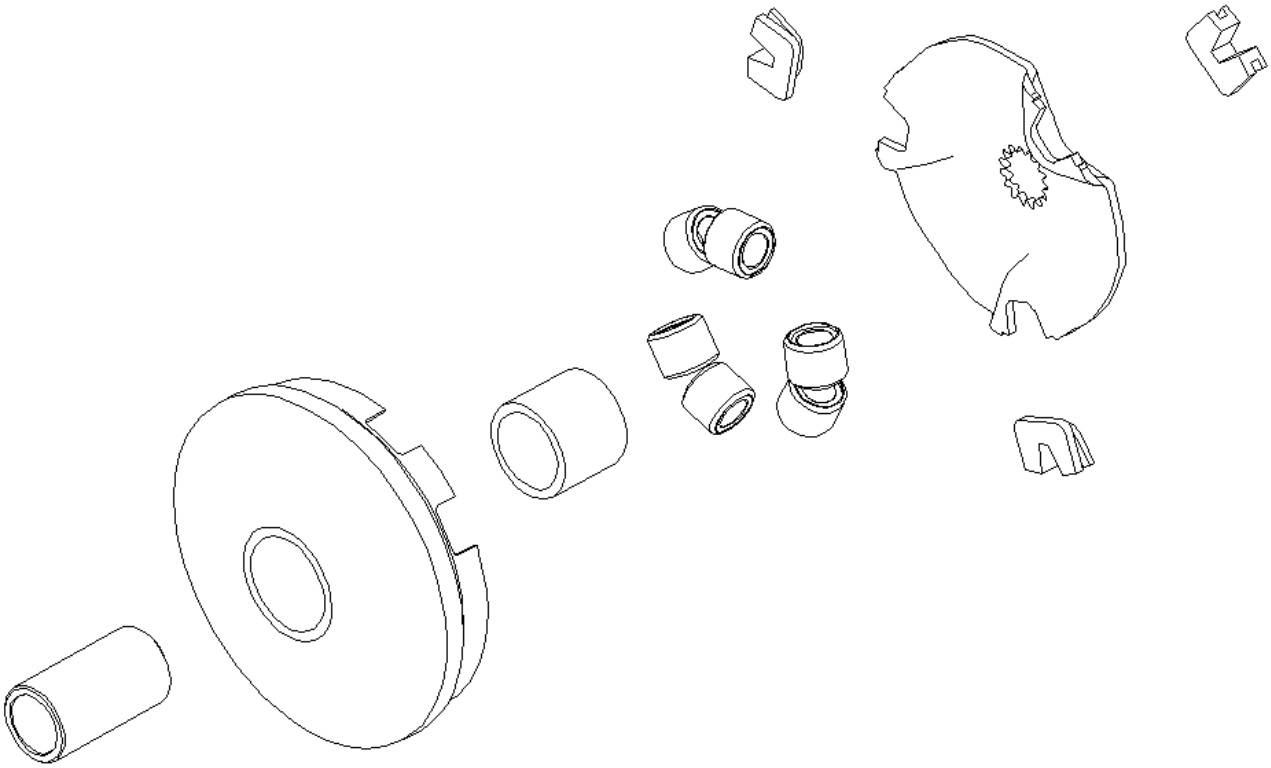

Check abrasion of the ball.
Measure the outer diameter of the ball.
Limit for use: 15.8mm

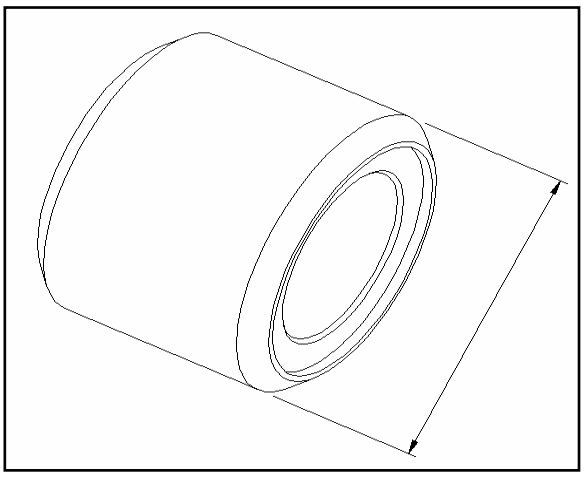

Measure the inner diameter of the right half drive wheel.
Limit for use: 20.05mm。
Measure the outer diameter of the sliding sleeve.
Limit for use: 19.94mm。

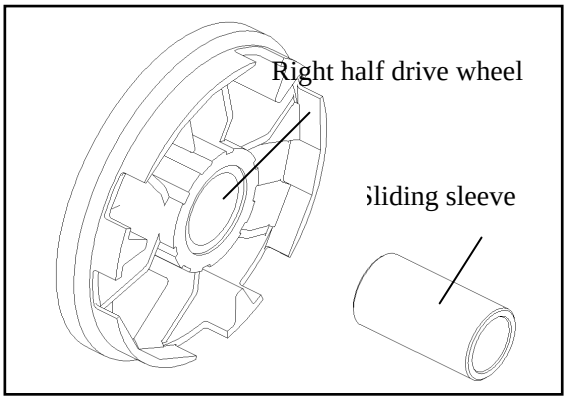

14.5 Clutch/driven wheel

14.5.1 Disassembly

Install the clutch sleeve with the fixer and remove fixing nuts.
Remove the clutch sleeve, clutch/ driven wheel.

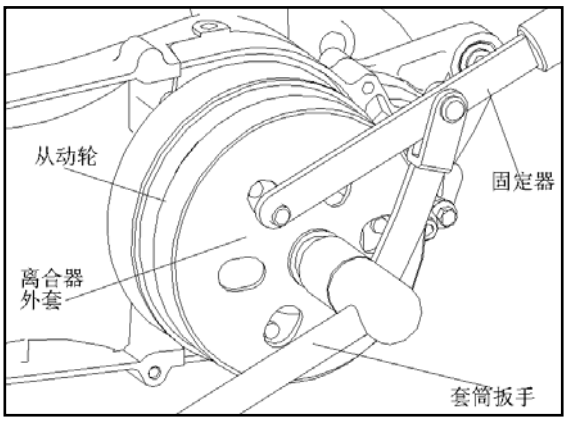

（从动轮：driven wheel 离合器外套：clutch sleeve 固定器：fixer 套筒扳手：socket spanner）

14.5.2 Breakdown of clutch

Remove the retainer ring and break down the clutch.
Note:
Do not stain the clutch facing with any grease during breakdown.

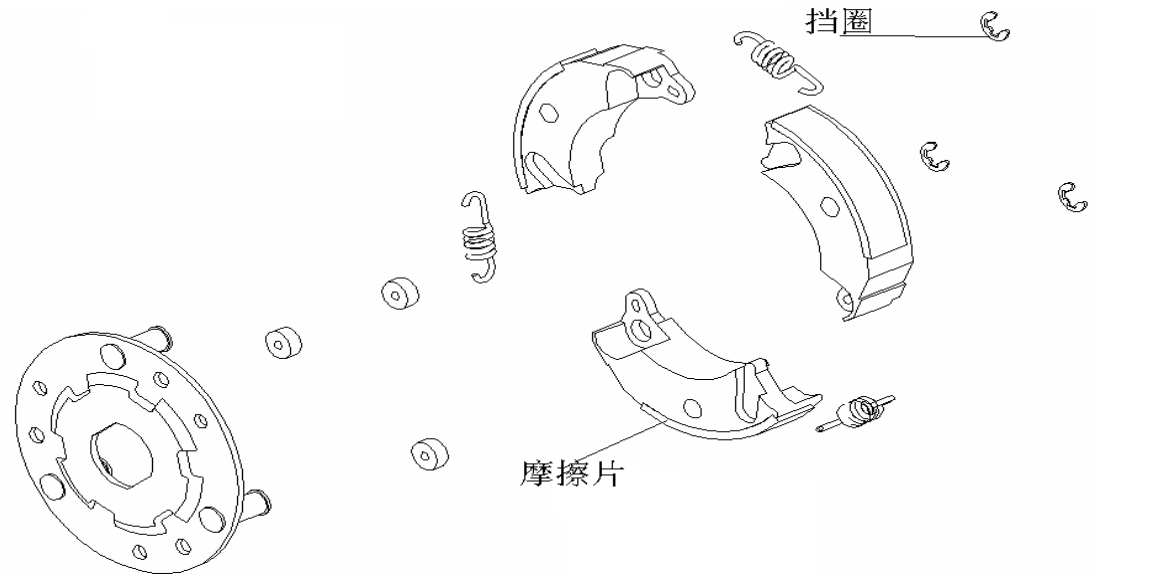

（挡圈：retainer ring 磨擦片：clutch facing）

Check abrasion of the clutch sleeve.
Measure the outer diameter of the clutch sleeve.
Limit for use: 107.2mm。

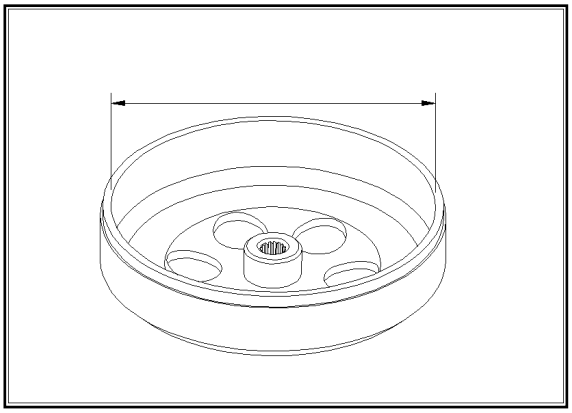

Check abrasion of the clutch facing.
Measure the thickness of the clutch facing.
Limit for use: 3.5mm

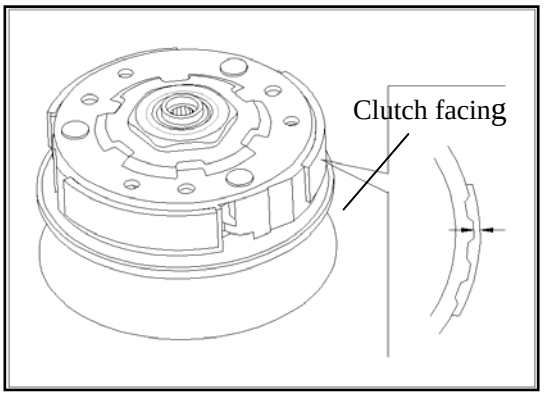

14.6 Breakdown of clutch and driven wheel

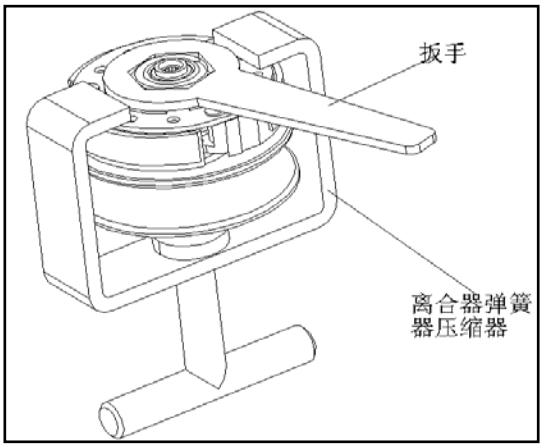

Clutch spring compressor must be used for disassembling the clutch spring.
Note:
Spring compressor must be used for disassembly to avoid damage to spring.
Install the spring compressor, and remove fixing nuts of the clutch.
Loosen the compressor, and disassemble the clutch and the driven wheel.
（扳手：spanner　离合器弹簧器压缩器：clutch spring compressor）

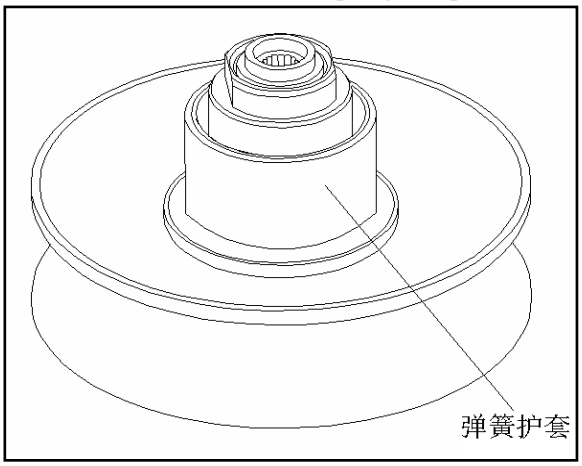

Remove the spring guard.

（弹簧护套：spring guard）

Remove the guide pin.
Remove the weldment on the left half driven wheel.
Remove the oil seal on the left half driven wheel.

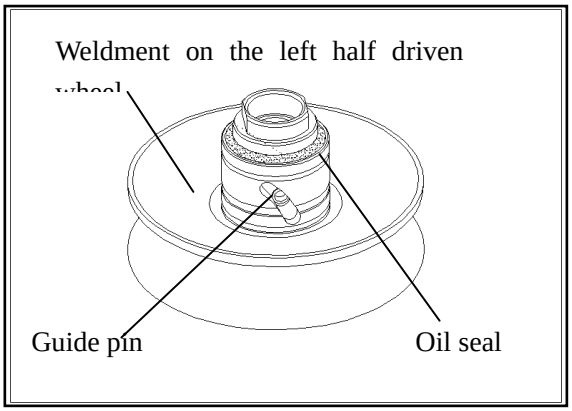

Check the free length of the clutch spring.
Limit for use: 93mm。

（自由长度：free length）

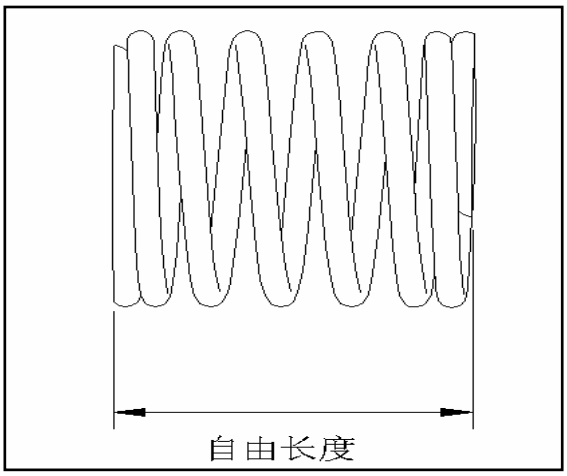

Check abrasion of the driven wheel.
Measure the outer diameter of the bushing on the right half driven wheel.
Limit for use: 33.95mm。

Measure the inner diameter of the sliding sleeve on the left half driven wheel.
Limit for use: 34.064mm。

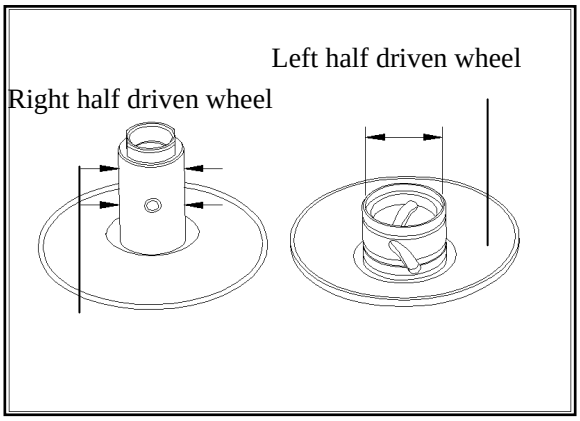

14.6.1 Replacement of the bearing on the right half driven wheel

Remove the needle bearing from the right half driven wheel.
Remove the elastic retainer ring and the outer rolling bearing.

Note:
Removed bearing cannot be used any more.

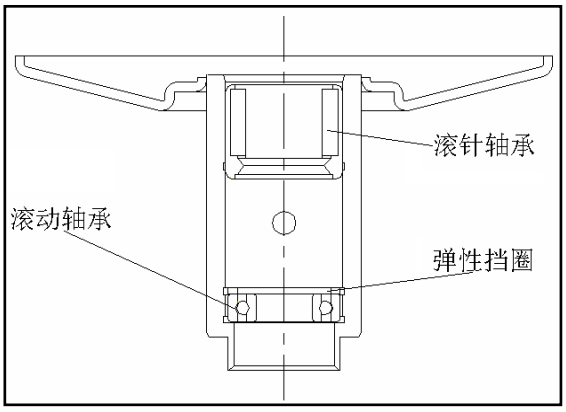

（滚针轴承：needle bearing 弹性挡圈：elastic retainer ring 滚动轴承：rolling bearing）

Apply grease evenly to the outer rolling bearing and then place it into the sleeve.

Note:

Place the outer rolling bearing into the sleeve with its marked side outwards. Then fill the sleeve with 8-9g grease.

Install the elastic retainer ring.

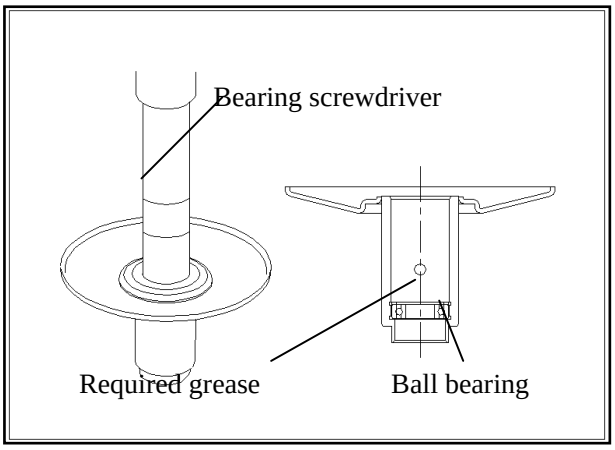

Install the needle bearing.

Press the needle bearing in with the equipment shown in the picture.

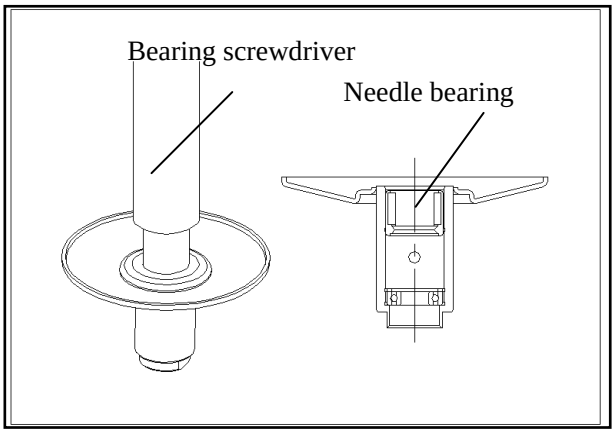

14.6.2 Combination of clutch and driven wheel

Eliminate any grease on the surface of the driven wheel.

Install the oil seal in the sliding sleeve of the left half driven wheel.

Apply grease evenly on the O-ring and install it on the sliding sleeve of the left half driven wheel.

(润滑油脂：lubricating grease 油封：oil seal O型圈：o-ring)

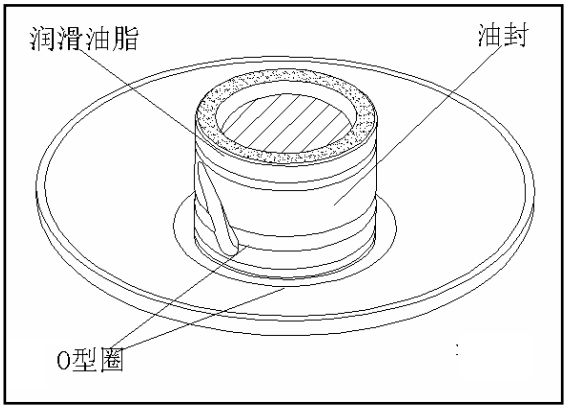

Combine the left half and the right half-driven wheel.

Apply grease evenly to the guide pin and then install it into the guide groove.

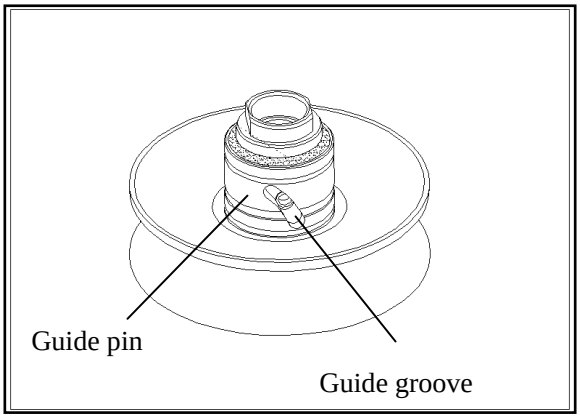

Install the spring guard.
Eliminateleaked grease.

(弹簧护套：spring guard)

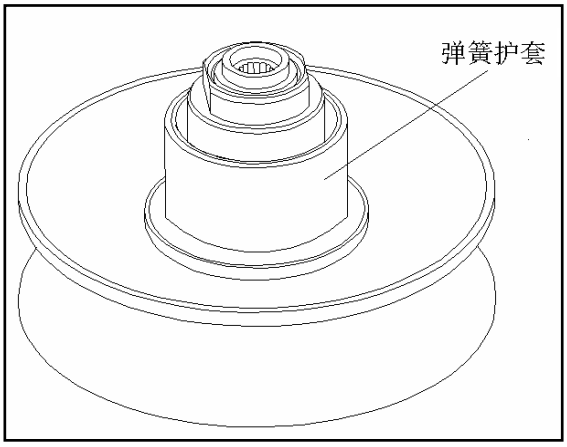

Install the clutch spring and the clutch on the driven wheel. Compress the set with the clutch spring. Install locking nuts after compression.

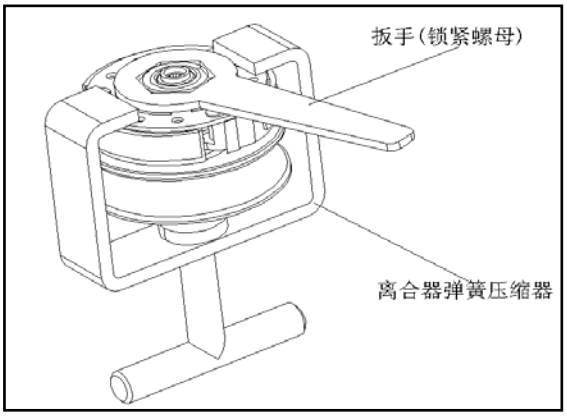

Note:
Properly compress the spring to avoid damage to the spring

扳手（锁紧螺母）：spanner (locking nut)
离合器弹簧压缩器：clutch spring compressor ）

14.7 Installation

Install the drive face/ clutch/ driven wheel in reverse order.

14.8 Kickstart mechanism

Disassembly/Check

Remove the left crankcase cover.
Loosen the screw and remove the guard.
Remove the start claw assembly.
Remove the start shaft assembly.

Check abrasion of the start shaft.
Check abrasion of stress area of the start shaft sleeve and the idler shaft.
Check abrasion of idle gear.
Measure clamping force of the snap spring.
Normal standard: 8-12N。

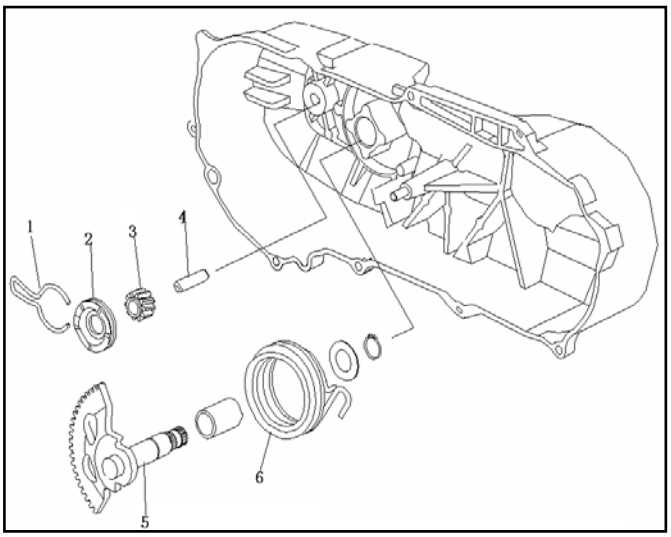

Note: 1. snap spring 2. start claw 3. idle gear 4. idler shaft 5. start shaft assembly 6. kickstart shaft spring

Decelerator

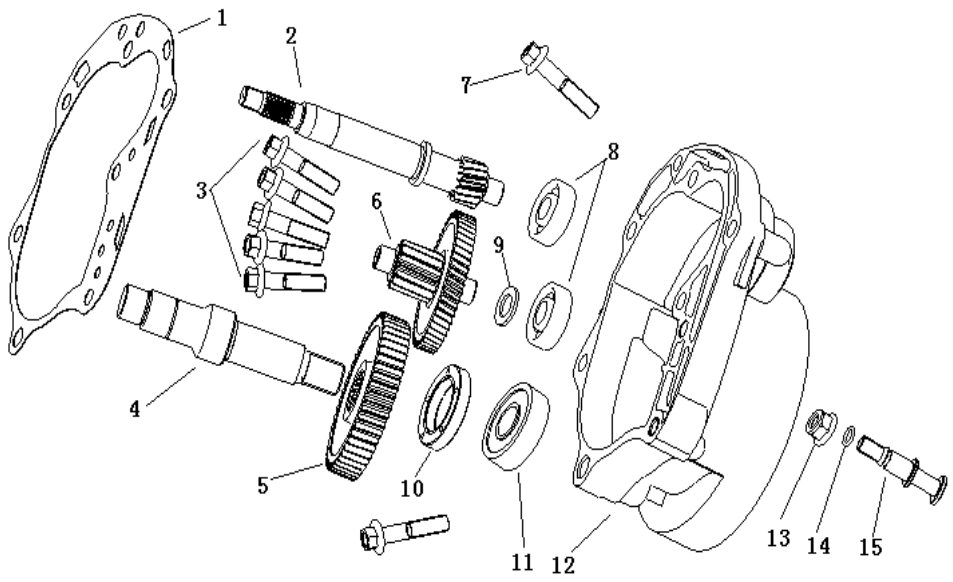

Function: transfer torque and decide final output torque and rotational speed.

1 gearbox cover gasket 2 input shaft 3 hex flange bolt 4 output shaft assembly 5 input shaft gear 6 intermediate shaft assembly 7 hex flange nut 8 rolling bearing 9 gasket 10 output shaft seal ring 11rolling bearing 12 gearbox cover 13 hex flange lock nut 14 O-ring 15 anchor pin

15. Decelerator

15.1 Preparing documents

Function: transfer torque and decide final output torque and rotational speed.

15.2 Failure diagnosis

No run after engine startup

Broken driving gear
Burnt driving gear

Leaked gear oil

Too much gear oil
Damaged oil seal

15.3 Gearbox

15.3.1 Disassembly

Remove the drain bolt and drain out gear oil inside the gearbox.
Loosen the bolt and remove the gearbox cover.

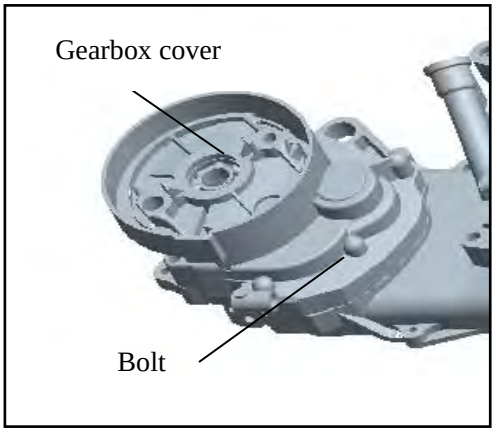

Remove the spacer and the locating pin.
Remove the clutch spindle and gear of output shaft.
Remove the middle shaft and the middle gear.

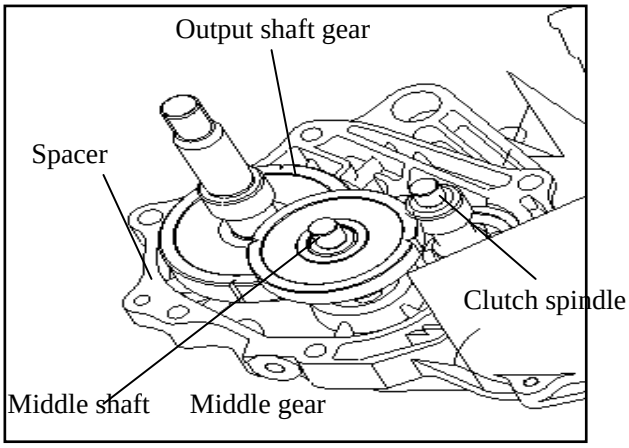

15.3.2 Check the Output Gearbox Cover

Check abrasion and damage of the clutch spindle, gear and bearing.
Exchange gearbox cover bearings.
Press the clutch spindle when the clutch spindle bearings are exchanged; remove it from the gearbox cover.

Note:
Removed bearing cannot be used any more. It shall be replaced.
Use special tools to dismantle the bearing and the oil seal.

Remove the oil seal from the gearbox and knock the bearing out.

Note:
Removed bearing cannot be used any more. It shall be replaced.
Use special tools to dismantle the bearing and the oil seal.

15.4 Assembly

Assemble it in reverse order.

Note:
Use special tools to assemble the bearing and the oil seal to avoid any damage.

Crankcase

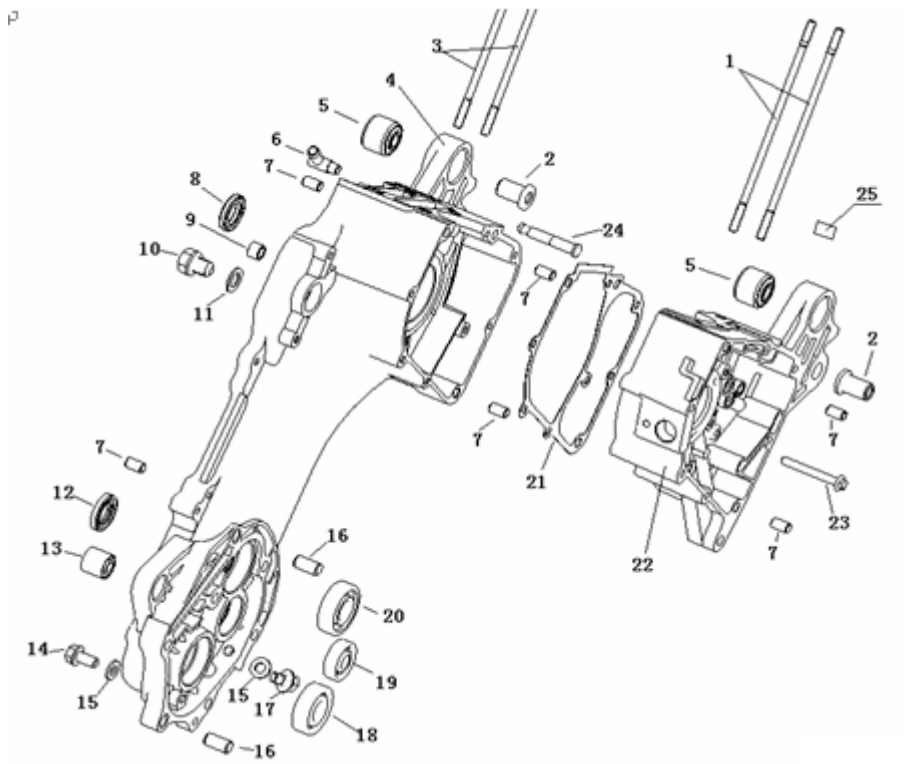

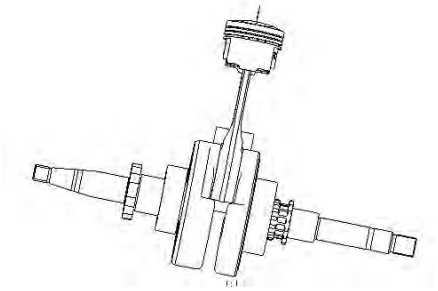

Note: The crankcase is thin-section casting thus shall not suffer impact during operation which may cause deformation or fracture.
All components must be cleaned and blown with high-pressure gas before test.
Lubricant in the crankcase should be drained out before operation.

1 double-end stud（B） 2 pin bush 3 double-end stud (A) 4 left box assembly 5 forward-bouncing joint 6 tube union 7distance sleeve 8 crankshaft seal ring 9starter bearing 10drain belt 11gasket 12 oil seal 17×30×5 13 shock absorbing bushing 14 hex flange bolt 15gasket 16 locating pin10×20 17 hex flange belt 18 deep groove ball bearing 19 rolling bearing 20 bearing 21 crankcase spacer 22 right box assembly 23 hex flange belt 24 stationary spring s shaft 25 plug 26 connecting rod with plunge

16 Crankcase

16.1 Preparing documents

Work instructions

The crankcase is thin-section casting thus shall not suffer impact during operation which may cause deformation or fracture.
All components must be cleaned and blown with high-pressure gas before test.
Lubricant in the crankcase should be drained out before operation.

Function of the crankcase: The crankcase is the load-bearing part of the engine. Its main function is to support the crankshaft, clutch, gearbox, cylinder block and cylinder cover, sustain combustion shock and inertia force from the movement of the connecting rod, and form part of closed space (oil sealing, gas sealing).
Suspension holes in the crankcase are linked with suspension holes in the body, which connects the engine to the frame and other parts.

Preparing Principles

Unit: mm

Item		Standard	Limit for use
Crankshaft	Left-right clearance of the larger end of the connecting rod	0.1-0.3	0.3
	Radial clearance of the larger end of the connecting rod	0.008-0.018	0.018

Tools

Universal holder **Clutch spring compressor**
Screwdriver lever **Socket spanner**
Guide rod **Bearing screwdriver**

16.2 Failure diagnosis

Noise in crankcase

Loose or broken parts inside the crankcase Loose crankshaft bearing
Loose crankpin bearing Seized clutch

16.3 Crankcase

16.3.1 Crankcase disassembly

Loosen the bolts and remove the fan, flywheel and coil.

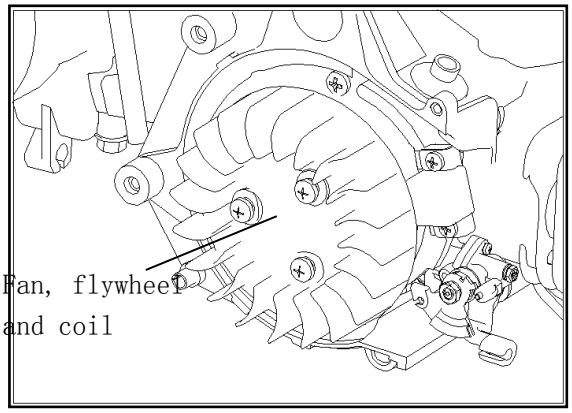

Remove right cover and fixing bolts of the crankcase.
Remove the left/right crankcase.

Note:
Do not damage the spacer.

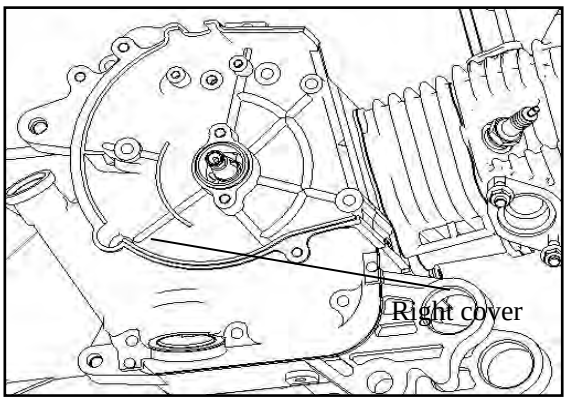

Remove the spacer and the locating pin.

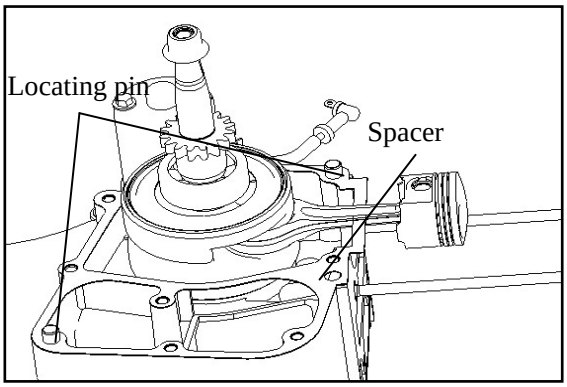

Remove the crankshaft from the crankcase.
Remove any spacer on the joint surface of the crankcase.
Note:
Do not damage the joint surface of the crankcase.

Remove the oil seal from the left crankcase.

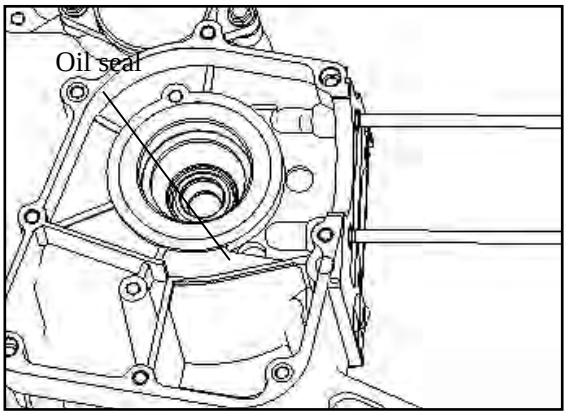

16.3.2 Check

Measure the left-right clearance of the larger end of the connecting rod.

Limit for use: 0.3mm.

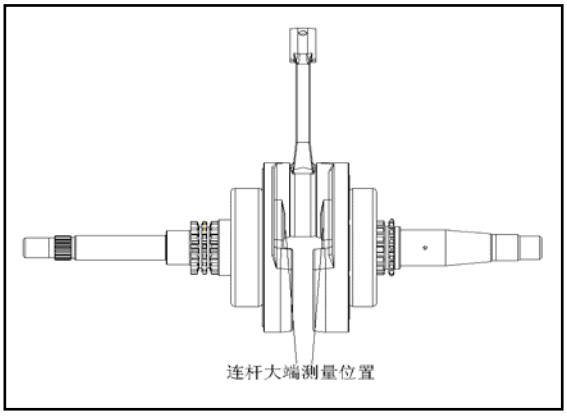

（连杆大端测量位置：measuring point at the larger end of the connecting rod）

Measure the clearance of the larger end of the connecting rod (X-Y direction).

Limit for use: 0.018mm。

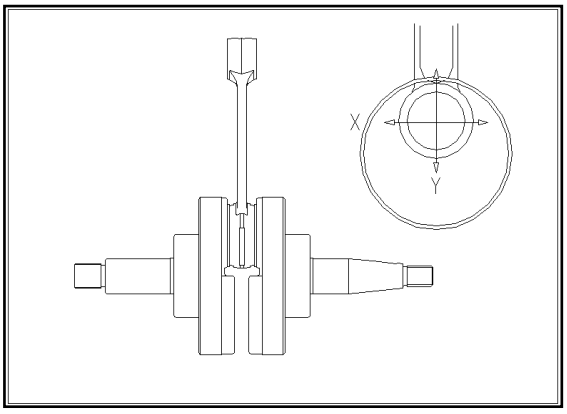

Check whether crankshaft bearing makes noises or is loosen when it rotates.

If yes, replace the crankshaft assembly.

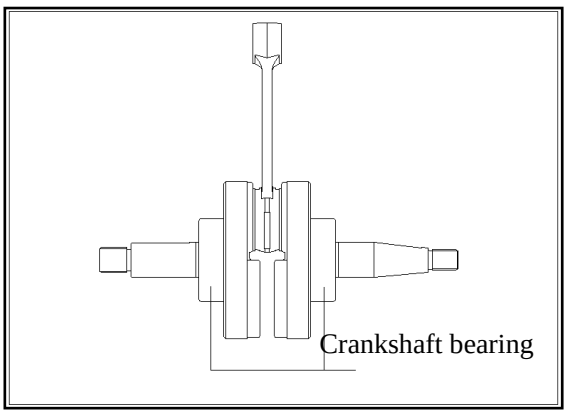

Note:
Removed oil seal cannot be used any more.
Remove the oil seal with a special tool

16.4 Assembly

Install the crankcase in reverse order.
Note:
Install the oil seal with special tools to avoid any damage to it.

Inspection and Maintenance of Exhaust Emission System

Muffler

A	Torque for fastening fixing screw 15 of the muffler connecter: 5-9 N·m
B	Torque for fastening fixing bolt 8 of the muffler: 5-9 N·m
C	Torque for fastening fixing bolt 3 of the muffler hoop: 5-9 N·m

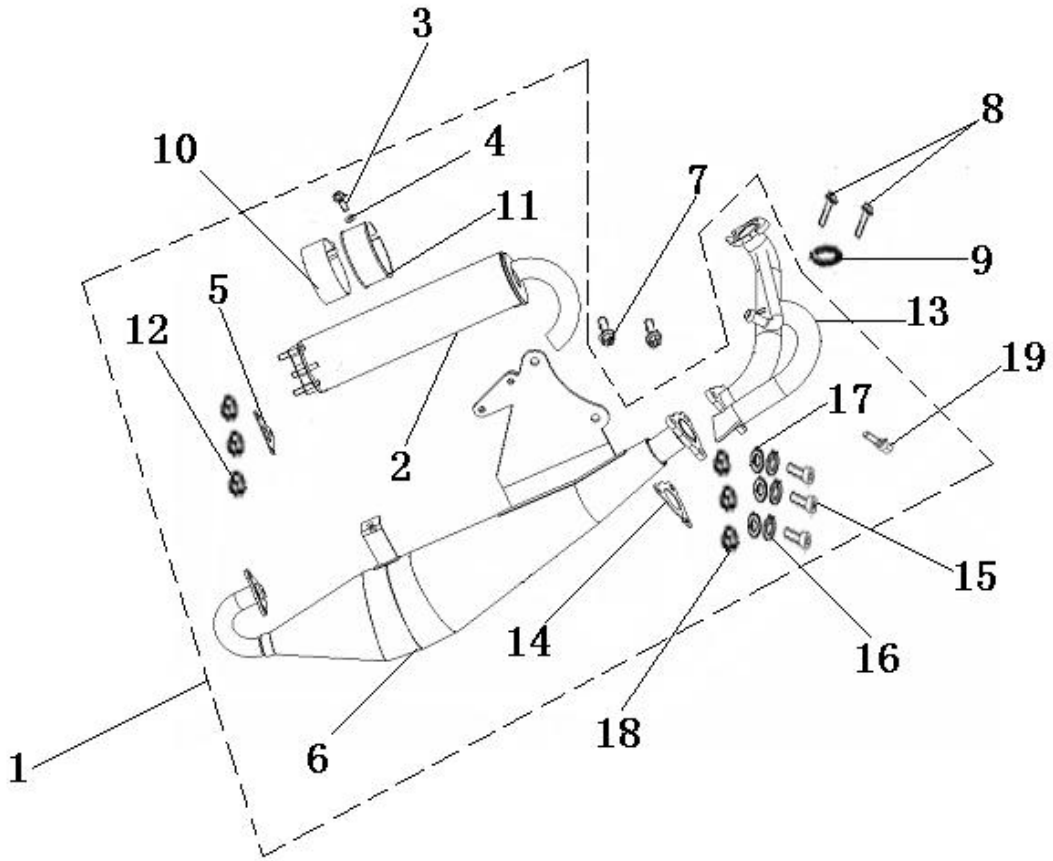

1 muffler assembly 2 muffler tube assembly 3 bolt M6×20 4 gasket 6mm 5 sealing gasket 6 tube assembly 7 bolt M8×20 8 bolt M6×16 9 exhaust pipe gasket assembly 10 heat-insulating rubber 11 muffler hoop 12 nut M6 13 exhaust pipe assembly 14 connecting flange gasket 15 screw M6×25 16 spring gasket 6mm 17 gasket 6mm 18 nut M6 19 screw without head M6×25

18. Exhaust Emission & Control System

18.1 Warranty on the exhaust emission & control system

1. The exhaust emission & control system of this motorcycle is in conformity with the revision of EC/97/24/5/I and 2002/81/EC B issued by the EU. We warrant that the exhaust emission & control system works normally during its effective period provided that users completely comply with all operation and maintenance requirements.
2. All new motorcycles delivered by our company have satisfied the noise test and comply with EC 97/24/9 implemented by the EU

18.2 Instructions on periodic maintenance

·It is the national requirement that all motorcycles produced domestically shall comply with exhaust emission standards to lessen environmental pollution. We strictly accord with these exhaust emission standards and also make great effort in purifying air and reducing pollution.
·This motorcycle has been strictly examined before delivery and is in conformity with all exhaust emission standards. We provide the following periodic inspection table for exhaust emission in consideration of different use by customers. Users shall carry out periodic inspection, adjustment or maintenance according to the schedule to ensure normal emission.
·For any problem, please contact Qianjiang distributors or Qianjiang service center.
·Relevant emission provisions are shown as follows:

Emission regulation	CO	HC+ NO_X
Emission standard	≤1.0g/km	≤1.2g/km

Pay attention to following items to ensure meeting emission standards:

1〉Please use lead-free gasoline #92 or #95，or the catalytic conversion device (two-stroke system) will be affected.

2〉Please use fuel with stipulated specification since any problem in the ignition system, the charging system or the fuel system has significant effect on the catalytic device. please go to our designated distributor or service center for inspection, adjustment or repair immediately when there is any problem found in the engine.

3〉Please comply with periodic maintenance requirements. The exhaust control system of this motorcycle is in accordance with the national regulation. For replacement of any component, please use our original parts and have our designated distributor or service center carry out such replacement.
4> For the exhaust control system, it is forbidden to make any adjustment or replacement at random (including use of spark plug, adjustment of idle speed, ignition timing, carburetor adjustment, etc.)

18.3 Mechanical function of the exhaust control system

General
This system adopts two-stroke single-cylinder engine, carburetor and air conduction device to maintain qualified exhaust gas. Meanwhile, active carbon canister is used for exhaust gas evaporated from fuel.

※ Air induction device

Induce air into the exhaust pipe to react incompletely combusted CO and HC into harmless gas.

Division	Device	Constitution	Function
Exhaust system	Catalytic device	Catalytic converter	Canned oxidized catalyst installed in the center of the exhaust pipe is able to oxidize CO, HC and NO_X.

18.4 Catalytic conversion system

18.4.1 Structure:

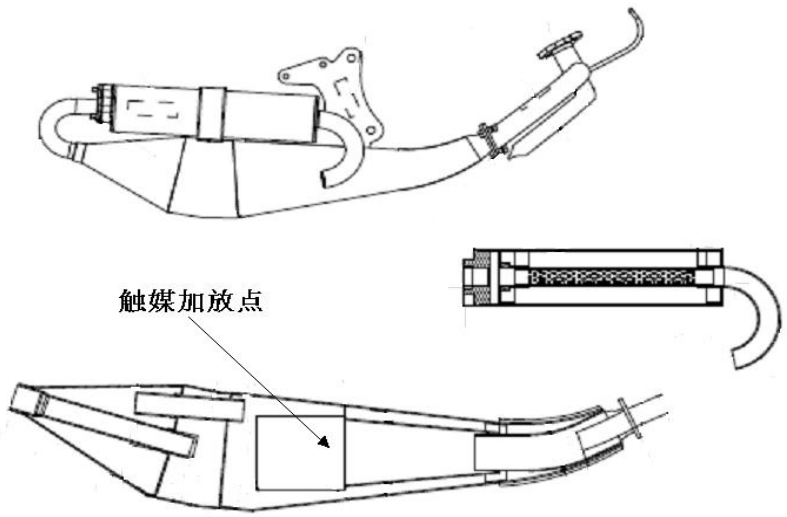

（触媒加放点：the place where catalyst is placed）

18.4.2 Instruction:

1. The function of convertible catalyst is to converse exhaust gas HC, CO and NO_X after complete combustion to harmless gas such as H_2O, CO_2、and、N_2 before emission.

2. Convertible catalyst contains rare metal such as platinum and rhodium. Only lead-free gasoline can be used.

※Note that lead gasoline may invalidate catalyst.

• General instructions for maintaining motorcycles (exhaust pipe) with catalytic converter:

1〉For motorcycles with catalytic converter, when the engine is running or just closes down, it shall not be touched for a while because of high temperature.

2〉Motorcycles with catalytic converter shall not be near flammable material.

3〉There is CO inside the exhaust pipe, which is harmful to health. So do not run the engine in closed space.

4〉Lead gasoline can not be used for motorcycles with catalytic converter (to prevent catalytic poisoning).

5〉Do not push the motorcycle to start the engine. If it is necessary, please wait until the temperature of the engine and the catalytic converter lower down.

6〉Do not make gear up or flame out when descending.

7〉Do not drive the motorcycle with bad ignition

8〉Do not remove spark plug and start the engine to see whether there is spark when repairing the ignition system of the engine. If it is necessary, it shall be finished in a short time.

18.5 Measures when the idle speed emission value exceeds the standard (Four-Stroke)

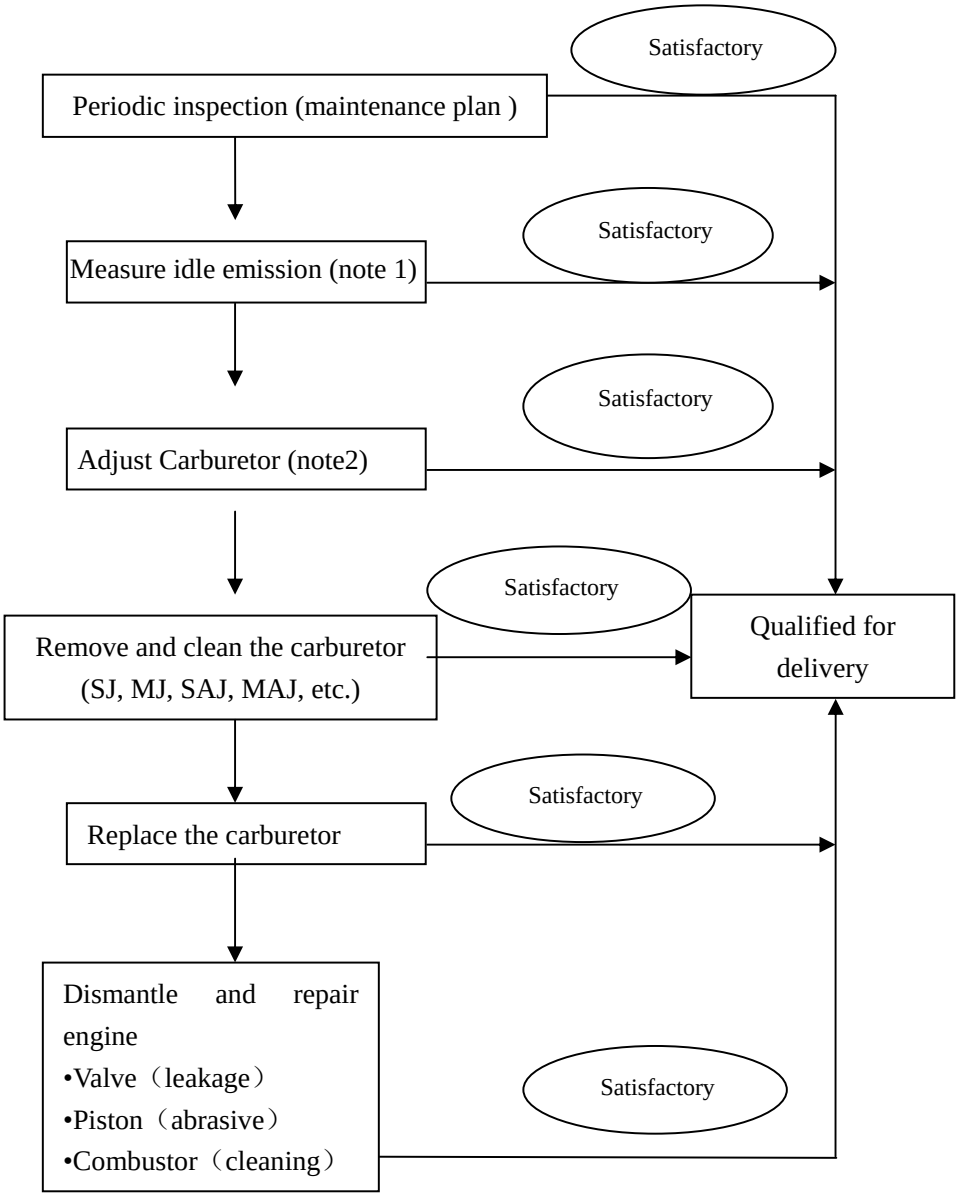

Note 1: measure it with the idle speed measurement program.

Note 2: adjust the engine speed with stop screws to live up to requirements and measure CO/HC at the idle speed.

B08 ELECTRICITY PRINCIPLE DIAGRAM

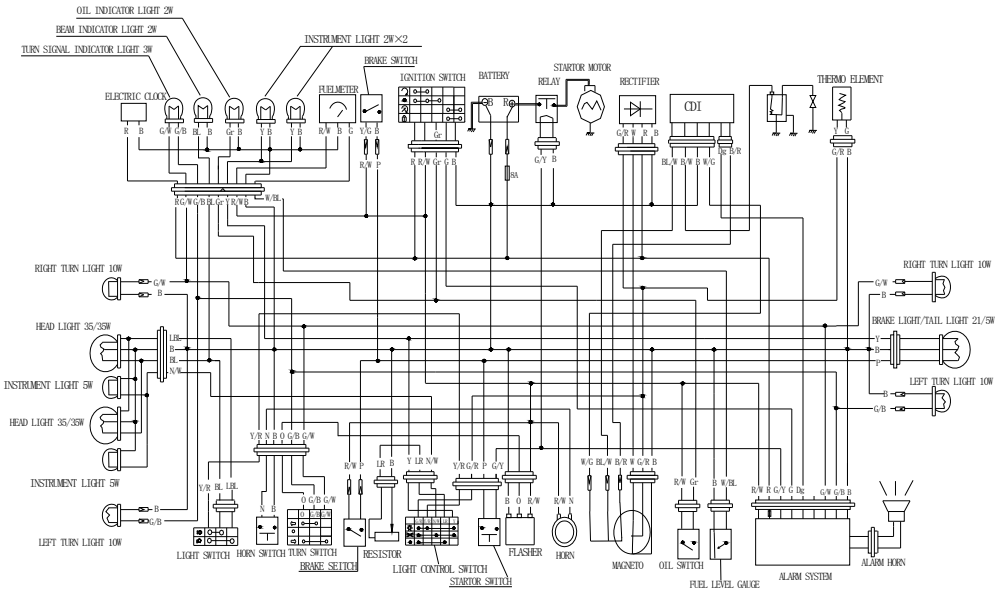

SYMBOL	B	R	W	BL	G	O	Y	P	N	LBL	Dg	G/Y	G/W	G/B	G/R	R/W	W/BL	B/W	N/W
COLOR	BLACK	RED	WHITE	BLUE	GREEN	ORANGE	YELLOW	PURPLE	BROWN	LIGHT BLUE	DARK GREEN	GREEN YELLOW	GREEN WHITE	GREEN BLACK	GREEN RED	RED WHITE	WHITE BLUE	BLACK WHITE	BROWN WHITE